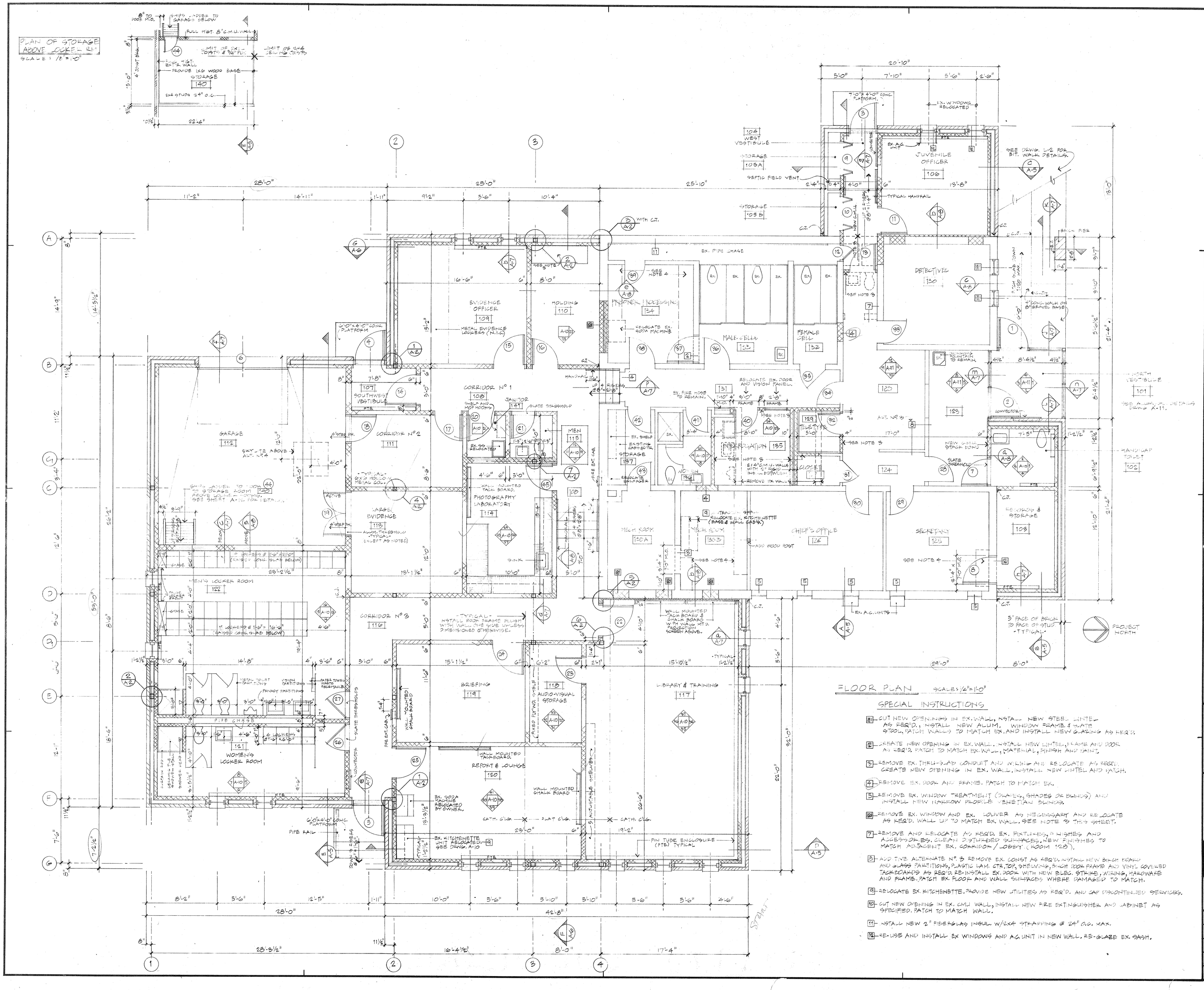

SPECIAL INSTRUCTIONS

1. CUT NEW OPENINGS IN EX. WALL, INSTALL NEW STEEL LINTEL AS REQ'D., INSTALL NEW ALUM. WINDOW FRAME & SLATE STOOL, PATCH WALLS TO MATCH EX. AND INSTALL NEW GLAZING AS REQ'D.
2. CREATE NEW OPENING IN EX. WALL. INSTALL NEW LINTEL, FRAME AND DOOR AS REQ'D. PATCH TO MATCH EX. WALL, MATERIAL, FINISH AND PAINT.
3. REMOVE EX. THRU-SLAB CONDUIT AND WIRING AND RELOCATE AS REQ'D. CREATE NEW OPENING IN EX. WALL, INSTALL NEW LINTEL AND PATCH.
4. REMOVE EX. DOOR AND FRAME. PATCH TO MATCH EX.
5. REMOVE EX. WINDOW TREATMENT (SHADES, SHADES OR BLINDS) AND INSTALL NEW NARROW PLOBLE VENETIAN BLINDS.
6. REMOVE EX. WINDOW AND EX. LOUVER AS NEW DOWNART AND RELOCATE AS REQ'D. WALL UP TO MATCH EX. WALL. SEE NOTE 9 THIS SHEET.
7. REMOVE AND RELOCATE AS REQ'D. EX. FIXTURES, FINISHES AND ACCESSORIES. CLEAN DISTURBED SURFACES. NEW FINISHES TO MATCH ADJACENT EX. CORRIDOR / LOBBY (ROOM 128).
8. ADD THE ALTERNATE No. 3 REMOVE EX. CONST AS REQ'D. INSTALL NEW BLOCK BOARD AND GLASS PARTITIONS, PLASTIC LAM. CTR. TOP, SHELVING, BLOCK ROOK FRAME AND VINYL COVERED TACKBOARDS AS REQ'D. RE-INSTALL EX. DOOR WITH NEW BLDG. STRIKE, WIRING, HARDWARE AND FRAME. PATCH EX. FLOOR AND WALL SURFACES WHERE DAMAGED TO MATCH.
9. RELOCATE EX. KITCHENETTE. PROVIDE NEW UTILITIES AS REQ'D. AND CAP DISCONTINUED SERVICES.
10. CUT NEW OPENING IN EX. CMU WALL, INSTALL NEW FIRE EXTINGUISHER AND CABINET AS SPECIFIED. PATCH TO MATCH WALL.
11. INSTALL NEW 2" FIBERGLAS INSUL. W/2X4 STRAPPING @ 24" O.C. MAX.
12. RE-USE AND INSTALL EX WINDOWS AND A.C. UNIT IN NEW WALL. RE-GLAZE EX. SASH.

GENERAL NOTES

1. **CONTRACTOR VERIFY ALL DIMENSIONS AT BUILDING**
2. REFER TO GENERAL NOTES DWNG. T-2.
3. CONC. MASONRY UNITS IN RENOVATED PORTION OF WORK WHICH ARE VISUALLY APPARENT FROM OCCUPIED SPACES ARE TO MATCH EX. CMU WALLS EXACTLY IN SIZE, COURSING AND BONDING UNLESS OTHERWISE NOTED.
4. EXISTING FURNISHINGS AND EQUIPMENT TO BE REMOVED AND RELOCATED BY OWNER UNLESS OTHERWISE NOTED. CONTRACTOR SHALL GIVE A WRITTEN NOTICE OF AREAS TO BE AFFECTED AND COORDINATE SAME WITH OWNER.
5. INSTALL EX. SECURITY BLOCK FURNISHED BY OWNER. PROVIDE CLIP ANGLES TO FLOOR AS REQ'D.

6" — 400 LF.
285 LF
8" — 600 LF
50 LF

REV. NO.	DESCRIPTION	DATE	BY

ALTERATIONS & ADDITIONS
POLICE STATION
SUDBURY, MASS.

KUBITZ & PEPI
ARCHITECTS INC.
66 CENTRAL STREET WELLESLEY MASS.

FLOOR PLANS

SCALE 1/2" = 1'-0" EXCEPT AS NOTED	CONTRACT
DATE AUG 28 80	DRAWING NO
DR BY	A1
CH BY WAG	
SHEET 5 OF 28	

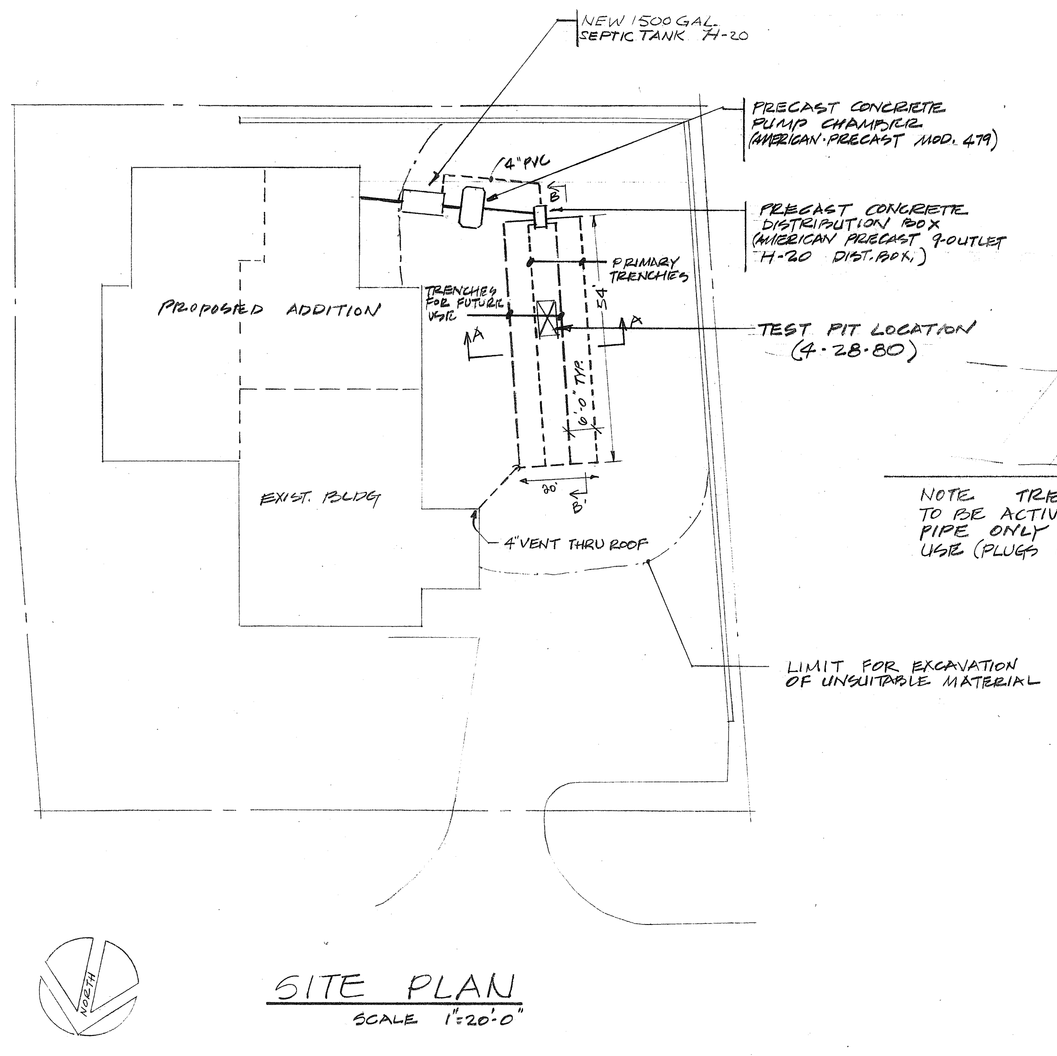

SITE PLAN
SCALE 1"=20'-0"

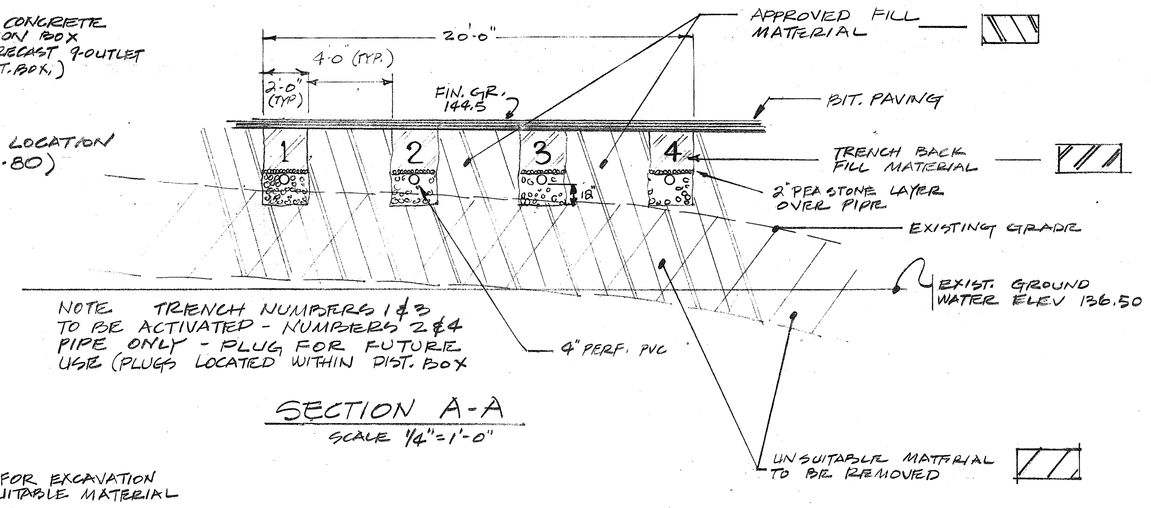

SECTION A-A
SCALE 1/4"=1'-0"

TEST PIT LOG

0"-5" BITUMINOUS PAVING
5"-24" GRAVEL
24"-35" LOAM
35"-46" SUB-SOIL
46"-120" SAND
(GROUND WATER AT 54" BELOW GRADE)
PERC. RATE > 2MIN/IN.

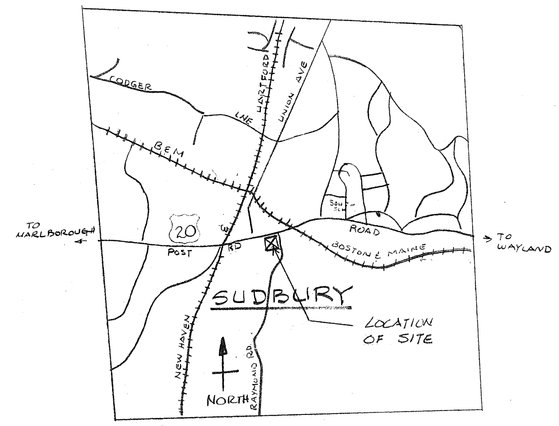

LOCATION PLAN
SCALE

DESIGN CRITERIA

FLOW: 40 PEOPLE @ 10 GPPD = 400GPD

SEPTIC TANK: 1.5 X 400 = 600 GAL - USE 1500 GAL. TANK DESIGN FOR H-20 LOADING

LEACHING TRENCHES: (2) TRENCHES 54' LONG X 2' WIDE X 1' DEEP =
216 FT² BOTTOM AREA } TOTAL
224 FT² SIDE AREA } LEACH AREA

216 X 2.5 GAL/FT² = 540 GAL/DAY/SIDE
224 X 1.0 " " = 224 " " "
764 GAL/DAY TOTAL CAPACITY

PUMP CHAMBER: 216 FT² BOTTOM AREA X 2" DOSE/2.15MIN
= 34.56 FT³ X 7.5 GAL = 259 GAL/DOSE

PUMPS: 50 GPM - DUPLEX = 5 MIN. DOSE

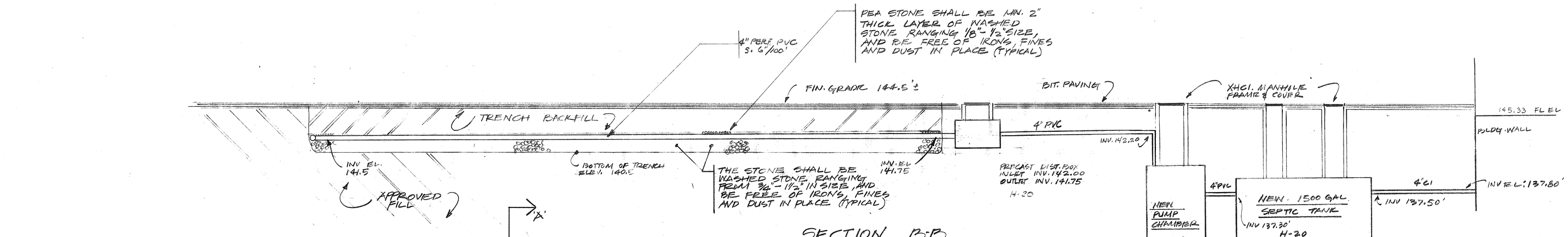

SECTION B-B
SCALE 1/4"=1'-0"

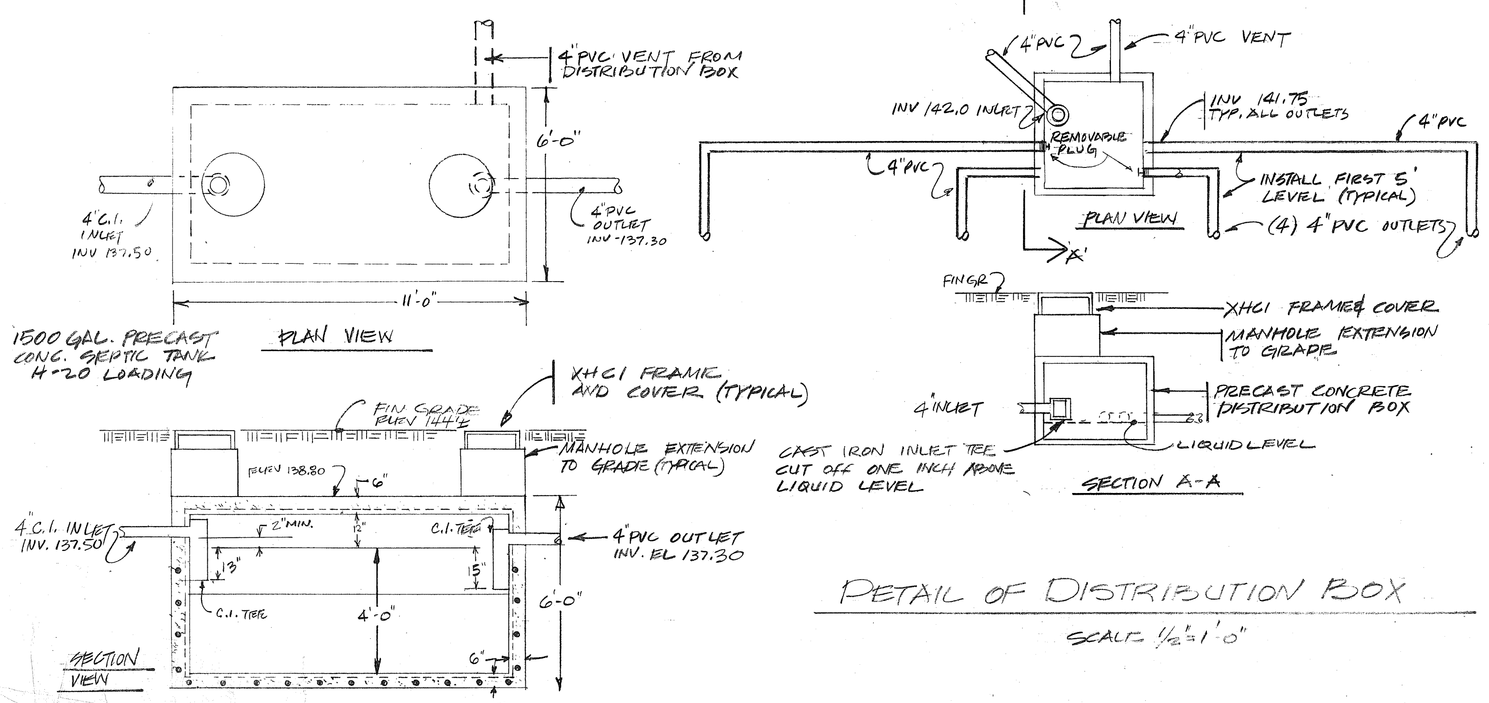

DETAIL OF SEPTIC TANK
SCALE 3/8"=1'-0"

DETAIL OF DISTRIBUTION BOX
SCALE 1/4"=1'-0"

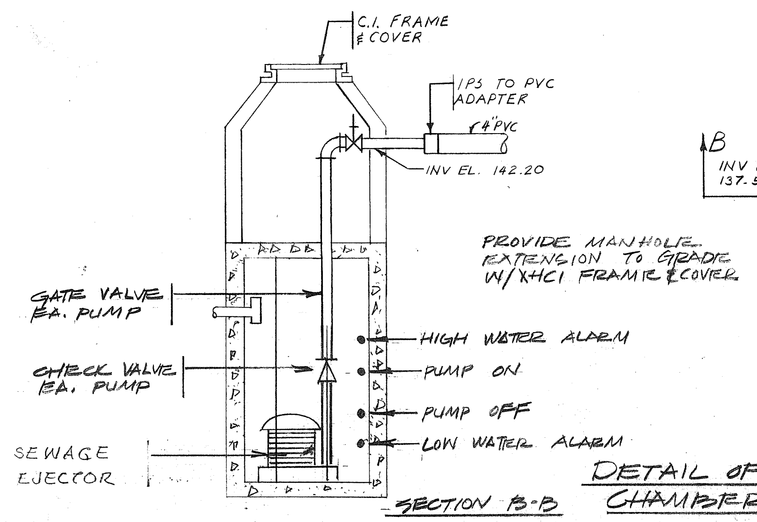

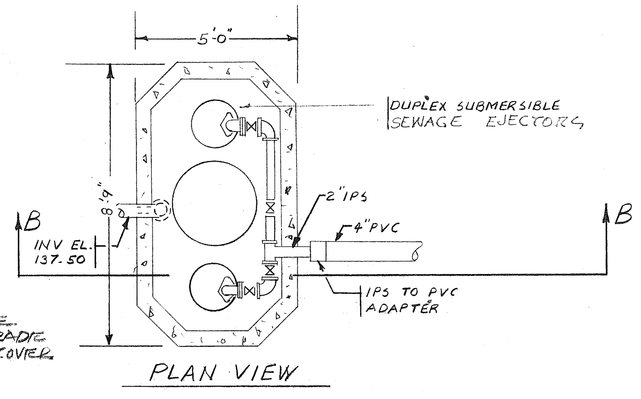

DETAIL OF PUMP CHAMBER
SCALE 3/8"=1'-0"

GENERAL NOTES

1. CONTRACTOR VERIFY ALL DIMENSIONS AT BUILDING
2. ALL GRAVEL AND STONE FOR SEWAGE DISPOSAL SYSTEM SHALL BE TRIPLE WASHED FREE FROM ALL IRONS, FINES, DUST, ETC. AND MEET THE APPROVAL OF THE ENGINEER, THE BOARD OF HEALTH AND TITLE V OF THE STATE ENVIRONMENTAL CODE PRIOR TO PLACEMENT OF ANY STONE IN TRENCHES.
3. THE ENTIRE INSTALLATION OF SEWAGE DISPOSAL SYSTEM SHALL BE INSTALLED TO MEET THE APPROVAL OF THE TOWN OF SUDBURY PUBLIC WORKS DEPT. AND THE BOARD OF HEALTH REQUIREMENTS
4. ALL PRECAST CONCRETE STRUCTURES SHALL BE DESIGNED FOR H-20 LOADING

REV. NO.	DESCRIPTION	DATE	BY

KEY PLAN

REGISTERED PROFESSIONAL ENGINEER No. 1163 ELECTRICAL ENGINEERING COMMONWEALTH OF MASSACHUSETTS

COMMONWEALTH OF MASSACHUSETTS ARTHUR EUGENE SULLIVAN No. 937 REGISTERED PROFESSIONAL ENGINEER

ALTERATIONS & ADDITIONS
POLICE STATION
SUDBURY, MASS.

KUBITZ & PEPI
ARCHITECTS INC.
66 CENTRAL STREET WELLESLEY MASS.

SEWAGE DISPOSAL PLANS & DETAILS

SCALE AS NOTED	CONTRACT
DATE AUG 28, 1980	DRAWING NO
DR BY J.L.S.	L3
CH BY E.F.B.	
SHEET 4 OF 28	

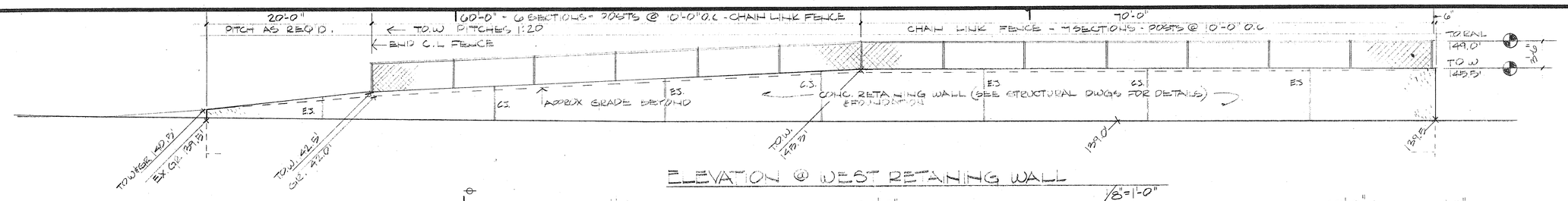

ELEVATION @ WEST RETAINING WALL

1/8"=1'-0"

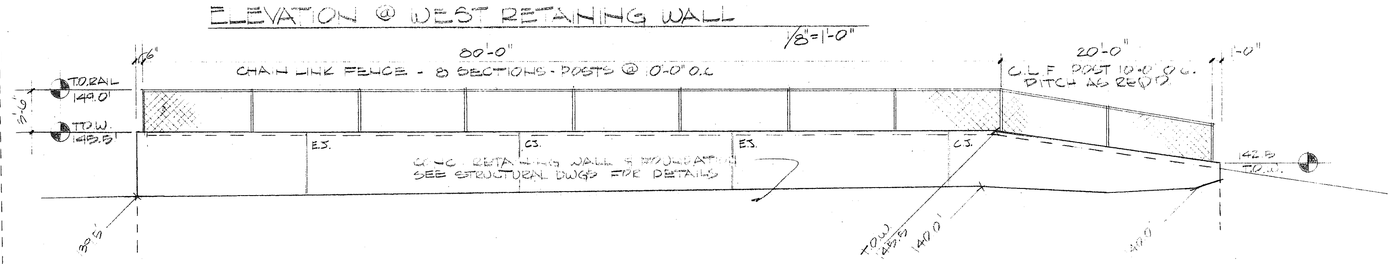

ELEVATION @ SOUTH RETAINING WALL

1/8"=1'-0"

REFER TO STRUCTURAL DRAWINGS FOR EXPANSION JOINTS (E.J.) & CONTROL JOINTS (C.J.)

NEW SITE PLAN

SCALE 1/16" = 1'-0"

EXISTING CONDITIONS TAKEN FROM A DRAWING ENTITLED "PLAN OF LAND IN SUDBURY, MASS. AND SHOWING BUILDING LOCATION & SITE PLAN BOSTON EDISON" BY PATRIOT PLAN INC. PREPARED BY T.L. GILMAN ENGINEERING DEPT. JAMES V. MELLON SR. TOWN ENGINEER. SCALE 1"=10'

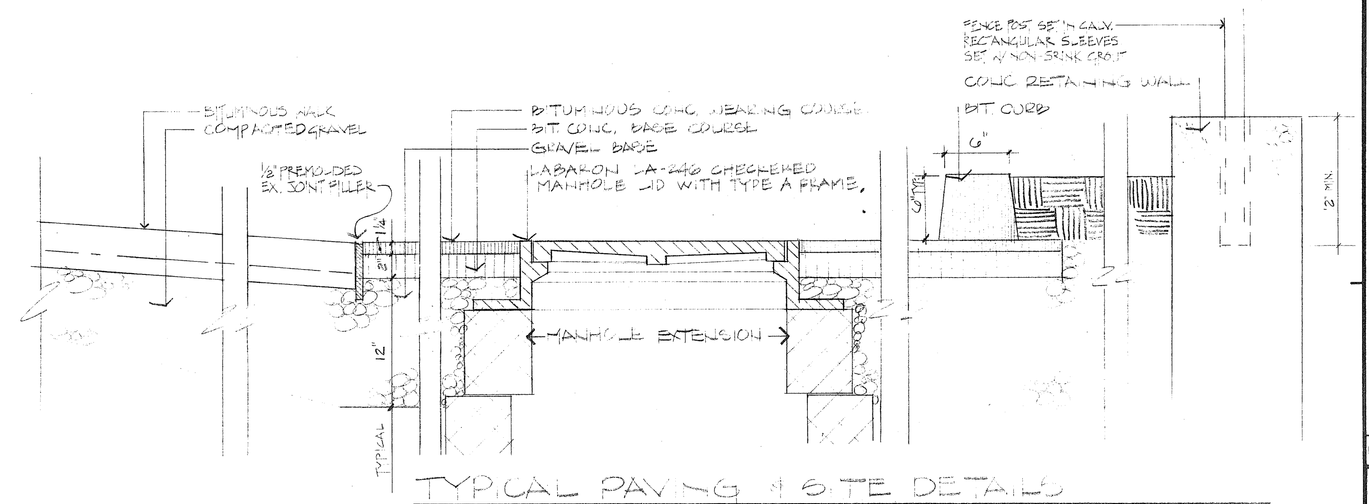

TYPICAL PAVING & SITE DETAILS

1/2"=1'-0"

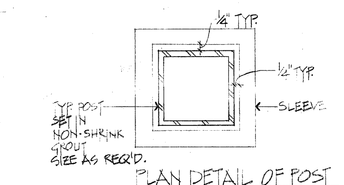

PLAN DETAIL OF POST

3"=1'-0"

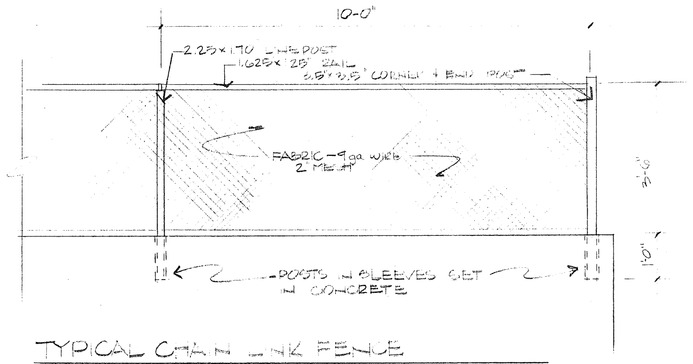

TYPICAL CHAIN LINK FENCE

1/2"=1'-0"

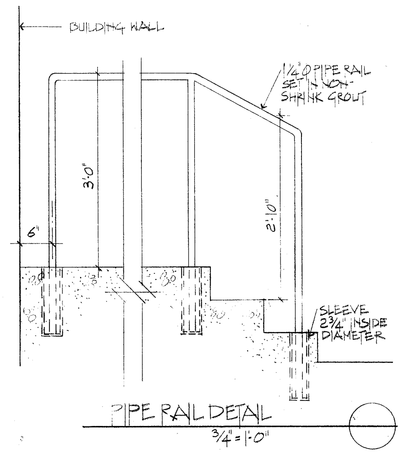

PIPE RAIL DETAIL

3/4"=1'-0"

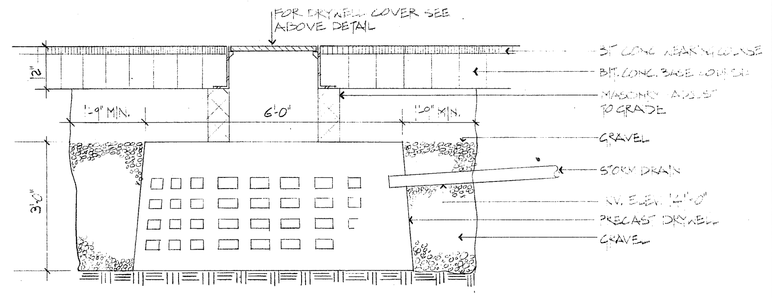

DRYWELL DETAIL

1/8"=1'-0"

TEST BORING REPORT, RAYMOND CONCRETE PILE CO. JOB NO 3-25, 9-20-80

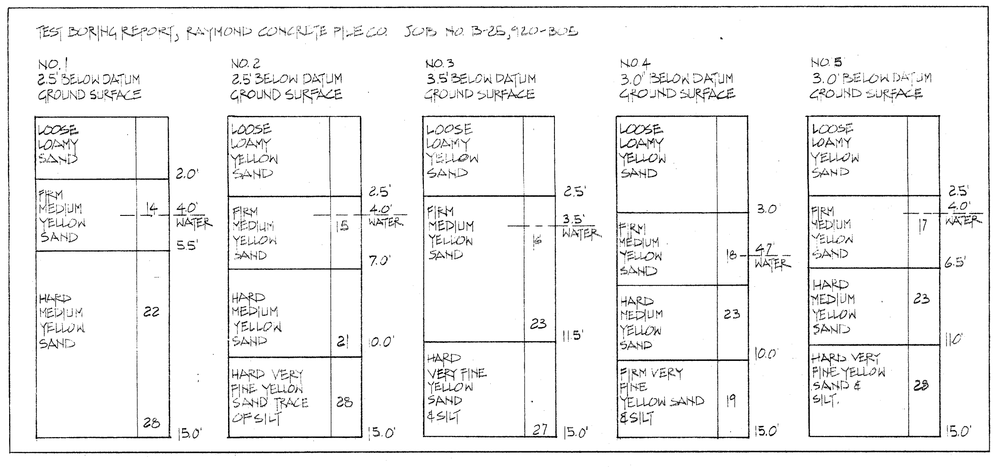

LEGEND:

(140)	EXISTING CONTOUR LINE
140	NEW CONTOUR LINE
+(40.7)	EXISTING SPOT ELEVATION
+ 45.00	NEW SPOT ELEVATION
G	EXISTING GAS SERVICE
W	EXISTING WATER SERVICE
W	NEW WATER SERVICE
T	EXISTING TELEPHONE SERVICE
W	EXISTING ELECTRIC SERVICE
X X	EXISTING SERVICE TO BE REMOVED
P	PROPERTY LINE
	NEW BIT. WALK
	EXISTING TREES TO BE REMOVED
	EXISTING TREES TO REMAIN
	NEW BIT. CURB
176+00	ROAD STATION POINT
	NEW BIT. PAVING
	NEW ADDITION
	EXISTING BLDG.
	LIMIT OF CONST. EASEMENT
M	MAPLE TREE
CH	CHERRY TREE
HEM	HEMLOCK TREE
	EX. PLANTING TO REMAIN
SD	STORM DRAIN
	TEMPORARY DRIVE
	BORING LOCATION (NOTE 6)
	INSTALL 15" DEPTH OF PLANTING LOAM

GENERAL NOTES

1. **CONTRACTOR VERIFY ALL DIMENSIONS AT BUILDING**
2. EXISTING TREES CHECKED FOR NOTING TO BE MAINTAINED WHEREVER POSSIBLE. ARCHITECT'S WRITTEN APPROVAL REQUIRED PRIOR TO THE REMOVAL OF ANY SUCH ITEMS NOT SPECIFICALLY NOTED ON DWGS FOR REMOVAL.
3. CONSTRUCTION EASEMENT PROPERTY SHALL BE RETURNED TO ITS EXISTING CONDITION FOLLOWING COMPLETION OF RETAINING WALL OR RELATED CONSTRUCTION.
4. CONNECT S.V. DRAIN STORM DRAIN LINED CAST IRON.
5. TEMPORARY PARKING FOR POLICE USE. REMOVE EX. PAVING & TOP SOIL FOR TEMP. PARKING. MAINTAIN 8 PARKING SPACES MINIMUM THROUGHOUT CONSTRUCTION FOR POLICE & PUBLIC USE ONLY. RE-GRADE LOAM & SEED AS REQ'D FOLLOWING COMPLETION OF NEW PARKING AREA.

REV. NO.	DESCRIPTION	DATE	BY

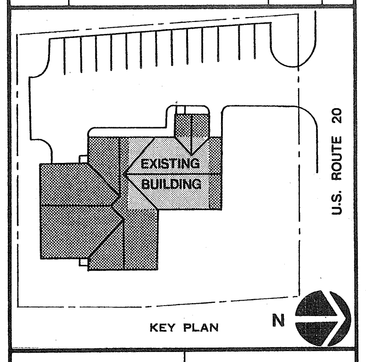

ALTERATIONS & ADDITIONS
POLICE STATION
SUDBURY, MASS.

KUBITZ & PEPI
ARCHITECTS INC.
66 CENTRAL STREET WELLESLEY MASS.

NEW SITE PLAN, DETAILS & BORING DATA.

SCALE AS NOTED	CONTRACT
DATE AUG. 28 80	DRAWING NO
DR BY LT/TH	L2
CH BY WAG	
SHEET 3 OF 28	