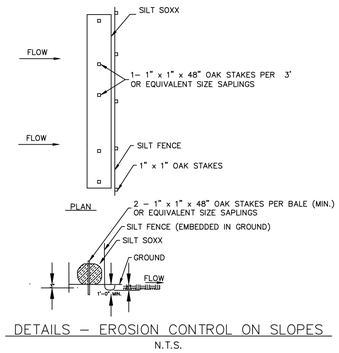

DETAILS – EROSION CONTROL ON SLOPES

N.T.S.

Trees for Potential Removal
w/in 100' Wetland Buffer Zone

- 6 White Pine
- 2 Oaks, including one 6" not shown on survey
- 2 Hemlock,
- 1 Black Birch, also not shown on survey

- Wildlife Corridor
- Remove invasives by hand (Barberry, Euonymous, Garlic Mustard, Wild Rose, Bush Honeysuckle)
- Fence to Enclose Upper Backyard

05.30.24 Fence is now proposed as a 4.5' H Aluminum Fence

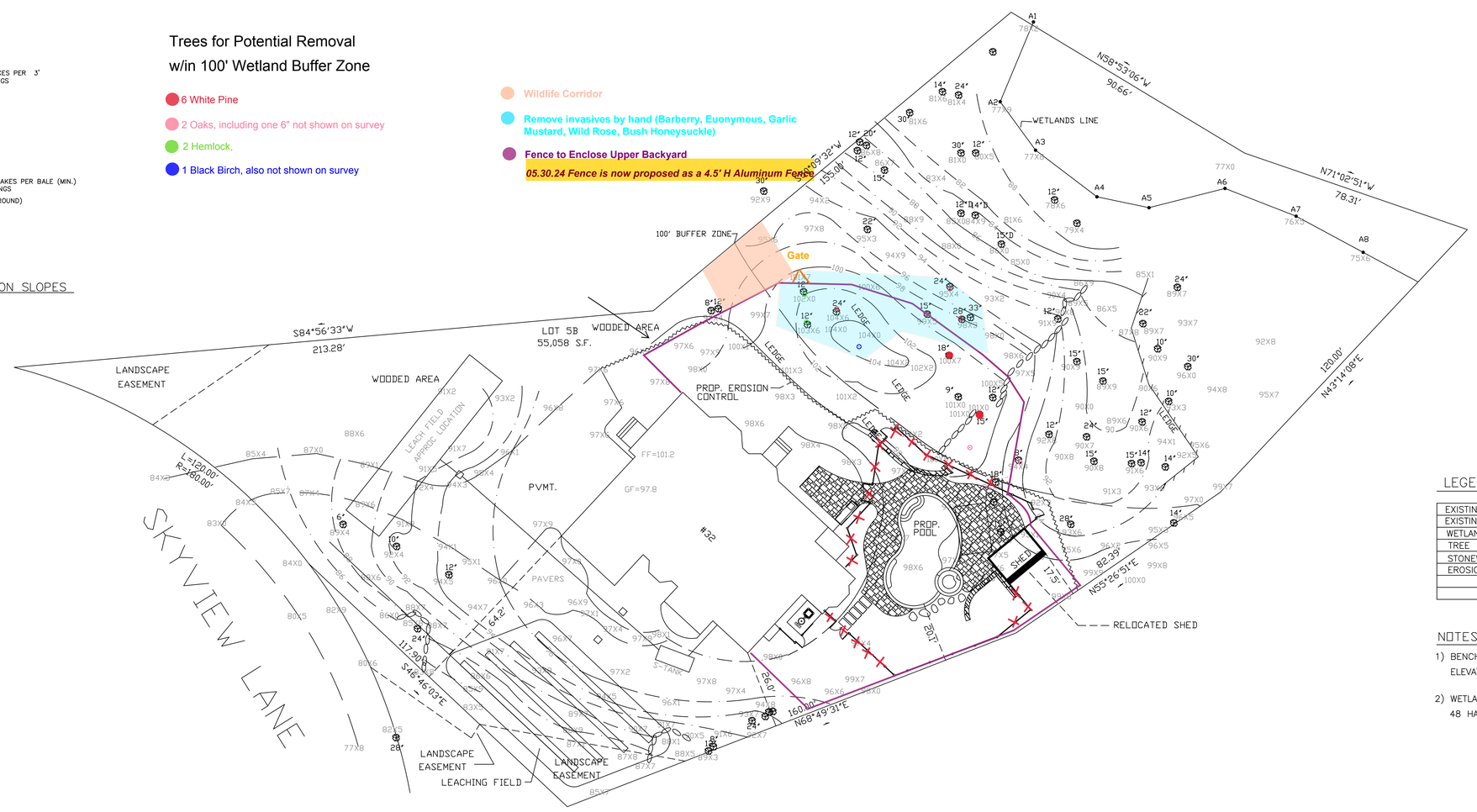

LEGEND

EXISTING CONTOUR	98
EXISTING SPOT GRADE	98X2
WETLANDS FLAG	A1
TREE	
STONEWALL	
EROSION CONTROL	

NOTES:

1) BENCHMARK: FINISH FLOOR AT ENTRANCE
ELEVATION = 101.2 (ASSUMED)

2) WETLANDS DELINEATION BY JOHN DICK
48 HATHORNE ST SALEM, MA

REV. 1/10/24 RESERVE LEACHING FIELD ADDED
REV. 1/9/24 SEPTIC SYSTEM ADDED
REV. 12/20/23 AMENDED EROSION CONTROL LOCATION

I HEREBY CERTIFY THAT THIS PLAN HAS BEEN PREPARED FROM AN ACTUAL ON THE GROUND INSTRUMENT SURVEY.

PAUL J. FINOCCHIO P.L.S. No.36115 DATE

PROPOSED SITE PLAN
OF
32 SKYVIEW LANE
IN
SUDBURY, MA

PREPARED BY: P.J.F. AND ASSOCIATES
4 HIGHLAND AVENUE
WAKEFIELD, MA 01880
(781) 883–5473

REV. 1/10/24
REV. 1/9/24
REV. 12/20/23

0' 10' 20' 30' 40'
SCALE: 1"= 20'

DATE: NOVEMBER 28, 2023 FILE No. 7817P2

FIELD	PLOT	DESIGN	DRAFT	CALC.	CHECK