SUDBURY BOARD OF SELECTMEN
TUESDAY JANUARY 7, 2020
7:00 PM, TOWN HALL - LOWER LEVEL

Item #	Time	Action	Item
	7:00 PM		CALL TO ORDER
			Opening remarks by Chairman
			Reports from Town Manager
			Reports from Selectmen
			Citizen's comments on items not on agenda
			MISCELLANEOUS
1.		*VOTE*	Discussion and possible vote on speed limits. Police Chief Scott Nix to attend.
2.			Fire Chief to present construction options for Fire Station #2 on Route 20.
3.		*VOTE*	Discuss and vote whether to sponsor 2020 Annual Town Meeting article to adopt legislation allowing the Town to grant one (1) additional alcoholic beverages serving license. National Development to represent ownership group, BPR Sudbury LLC, in the request for the issuance of a liquor license to support the addition of a restaurant to the retail lineup at Meadow Walk.
4.			Discussion regarding process for Town Manager candidate interviews on 1/9/20.
5.		*VOTE*	Discussion and possible vote on Town Counsel 3-year Evaluation
6.			Discussion on the Fairbank Community Center.
7.			Citizen's comments (cont.)
8.			Discuss upcoming agenda items
			CONSENT CALENDAR
9.		*VOTE*	Approve regular session minutes of 10/11/19, 11/5/19, 11/19/19, and 11/21/19.

These agenda items are those reasonably anticipated by the Chair which may be discussed at the meeting. Not all items listed may in fact be discussed and other items not listed may also be brought up for discussion to the extent permitted by law.

Item #	Time	Action	Item
10.		*VOTE*	Vote to authorize the Interim Town Manager to submit 2020 Annual Town Meeting articles on behalf of the Board of Selectmen.
11.		*VOTE*	Vote to accept $10K donation from LSRHS to support the Featherland Multisport Court Project Phase 2 (Article #30 approved at ATM 2019).
12.		*VOTE*	Vote to accept Baypath Elder Services grants for a total of $20,929, as requested by Debra Galloway, Senior Center Director.

These agenda items are those reasonably anticipated by the Chair which may be discussed at the meeting. Not all items listed may in fact be discussed and other items not listed may also be brought up for discussion to the extent permitted by law.

SUDBURY BOARD OF SELECTMEN
Tuesday, January 7, 2020

MISCELLANEOUS (UNTIMED)

1: Speed limits

REQUESTOR SECTION
Date of request:

Requestor: Police Chief Scott Nix

Formal Title: Discussion and possible vote on speed limits. Police Chief Scott Nix to attend.

Recommendations/Suggested Motion/Vote:

Background Information:

Financial impact expected:

Approximate agenda time requested:

Representative(s) expected to attend meeting:

Review:

Patty Golden	Pending	
Maryanne Bilodeau	Pending	
Jonathan Silverstein	Pending	
Daniel E Carty	Pending	
Board of Selectmen	Pending	01/07/2020 7:00 PM

At a legal meeting of the qualified voters of the Town of Sudbury,

held October 15, 2018 the following business was transacted under

Article 6 – ACCEPT GENERAL LAW REGULATING SPEED LIMITS

MODERATOR DECLARED VOTED BY MORE THAN A MAJORITY:

To accept the provisions of G.L. c.90, §17C, which allows the Board of Selectmen to establish a speed limit of 25 miles per hour in any thickly settled or business district in the Town that is not a state highway.

A true copy, Attest:

Rosemary B. Harvell
Town Clerk

Attachment1.a: TM Vote for 25 MPH Thickly Settled (3612 : Speed limits)

Sudbury Police Department
Office of the Chief of Police

75 Hudson Road
Sudbury, MA 01776
Business (978) 443-1042
Fax (978) 443-1045
nixs@sudbury.ma.us

Scott Nix
Chief of Police

December 26, 2019

To: Maryanne Bilodeau, Interim Town Manager
From: Scott Nix, Chief of Police
RE: Recommen

Maryanne,

During Town Meeting on October 15, 2018 residents voted to accept the provisions MGL c. 90 § 17C which authorizes the Board of Selectmen to establish a speed limit of 25 miles per hour in any thickly settled or business district as defined under the law. MGL c. 90 § 17C defines a thickly settled or business district as "the territory contiguous to any way which is built up with structures devoted to business, or the territory contiguous to any way where dwelling houses are situated at such distances as will average less than two hundred feet between them for a distance of a quarter of a mile or over." Said authorization can either be done on an individual street basis or as a whole for all areas as defined.

To avoid potential confusion of motorists, MassDOT recommends the Board of Selectmen adopt the reduced speed limit on a town-wide basis with which I would concur. Therefore, I would respectfully request the Board of Selectmen consider adopting the provisions on a town-wide basis. If so approved, roadways entering Sudbury would be posted to reflect the reduced speed as an advisory. As well, efforts would be made to proactively disseminate the change to residents as well as notify MassDOT as required. Thank you for your time and consideration.

Respectfully,

Scott Nix
Chief of Police

Attachment1.b: Board of Selectmen Memo fo 1-7-20 (3612 : Speed limits)

SUDBURY BOARD OF SELECTMEN
Tuesday, January 7, 2020

MISCELLANEOUS (UNTIMED)

2: Fire Station #2 presentation on construction options

REQUESTOR SECTION
Date of request:

Requestor: Fire Chief John Whalen

Formal Title: Fire Chief to present construction options for Fire Station #2 on Route 20.

Recommendations/Suggested Motion/Vote: Fire Chief to present construction options for Fire Station #2 on Route 20.

Background Information:
Looking for the Selectmen to provide direction for this project that may become a Town Meeting Article for May 2020.
Also see attached presentation.

Financial impact expected:n/a

Approximate agenda time requested:

Representative(s) expected to attend meeting:

Review:

Patty Golden	Pending	
Maryanne Bilodeau	Pending	
Jonathan Silverstein	Pending	
Daniel E Carty	Pending	
Board of Selectmen	Pending	01/07/2020 7:00 PM

Sudbury Fire Station #2
Option 1

Sudbury, Massachusetts
September 2019

KAESTLE BOOS
associates, inc
ARCHITECTURE
LANDSCAPE ARCHITECTURE
INTERIOR DESIGN
STRUCTURAL ENGINEERING

Attachment2.a: Sudbury FD - Option 1 - Complied - Handout V3 (3620 : Fire Station #2 presentation on construction options)

0 20' 40' 80'

SCALE: 1" = 40'-0"

SUDBURY FIRE DEPARTMENT - STATION NO. 2 PHASE 1

550 BOSTON POST ROAD
SUDBURY, MA
January 29, 2018

KAESTLE BOOS associates, inc

2017 © COPYRIGHT KAESTLE BOOS ASSOC., INC.

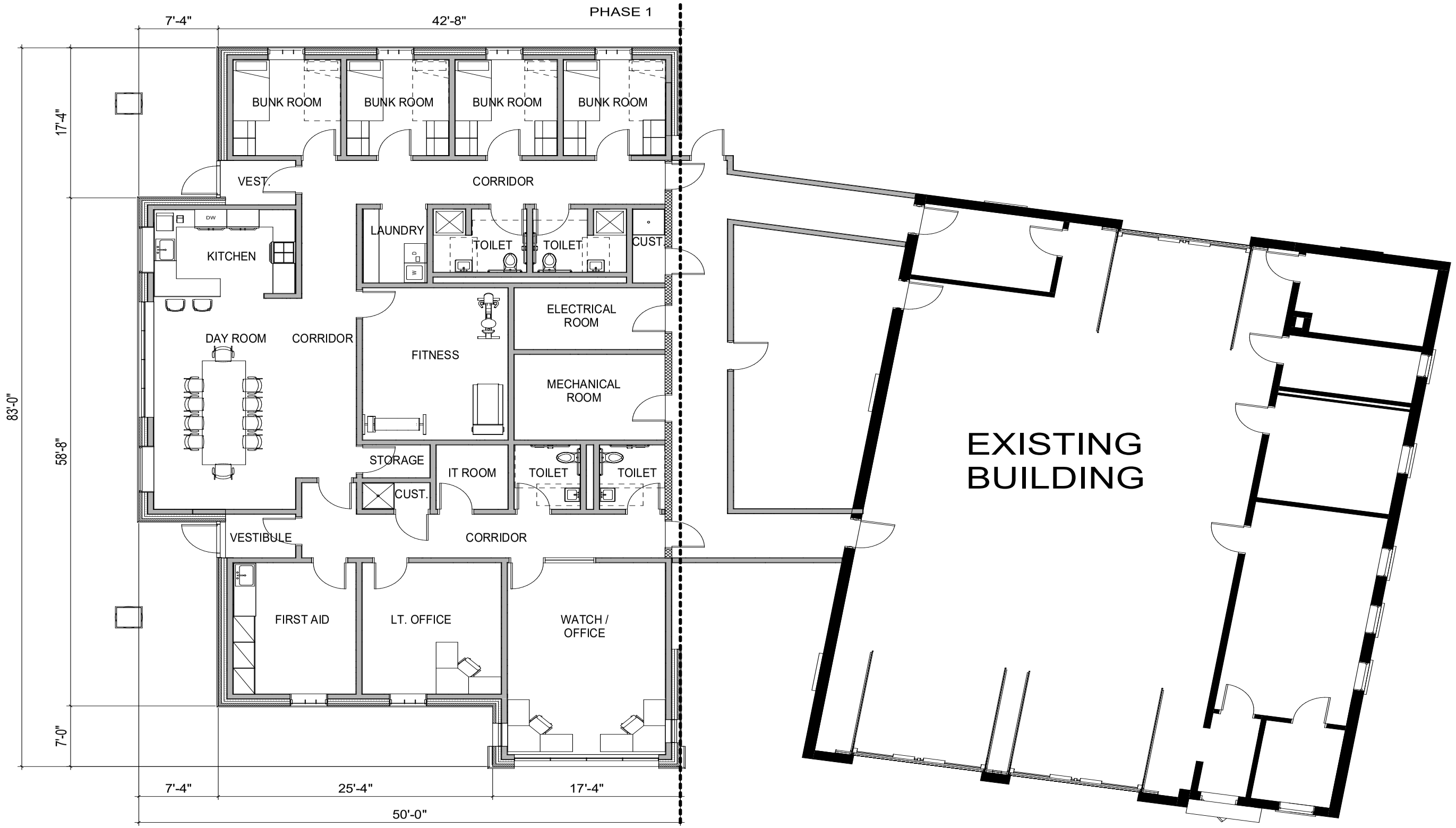

SUDBURY FIRE DEPARTMENT - STATION NO. 2 PHASE 1

550 BOSTON POST ROAD
SUDBURY, MA

KAESTLE BOOS associates, inc

2017 © COPYRIGHT KAESTLE BOOS ASSOC., INC.

SUDBURY FIRE DEPARTMENT - STATION NO. 2 PHASE 1

550 BOSTON POST ROAD
SUDBURY, MA

KAESTLE BOOS associates, inc

2017 © COPYRIGHT KAESTLE BOOS ASSOC., INC.

Sudbury Fire Station 2

September, 2019

Opinion of Probable Costs
Schematic Design Level: PHASE I

KAESTLE BOOS associates, inc

Description			Subtotals/ Total	Comments
Construction Costs				
Demolition			$0	NIC - Phase I
Hazmat Abatement			$0	NIC - Phase I
Sitework			$563,620	
New Building Construction	3,526 SF		$1,695,849	
		Subtotal:	$2,259,469	
Schematic Level Estimating Contingency	@	10.0%	$225,947	
		Subtotal Direct Construction Costs:	**$2,485,416**	
General Conditions & Overhead	@	8.00%	$198,833	
Insurance	@	1.00%	$26,842	
Bonds	@	0.65%	$17,622	
GC Fee (Profit)	@	3.00%	$81,861	
Permit Fee	@	1.50%	Waived by Town	*Confirm*
Escalation (Bid 1st Quarter of 2021)	@	8.75%	$246,424	
		Subtotal Construction Cost:	**$3,057,000**	
Indirect Project Costs				
Land Survey			$5,000	*(incorp. additional land)*
Geotechnical Investigation			$15,000	
Arch.& Eng.Fees			$260,000	
Add Services & Reimbursables			$50,000	
Peer Review			$4,000	
Owner's Project Manager			$152,000	
Furniture & Furnishings			$42,000	*Allowance*
Communications Equipment			$50,000	*Owner's Allowannce*
Network & Computers			$25,000	*Owner's Allowannce*
Utility Backcharge			$25,000	*Allowance*
Moving			$10,000	
Bid Doc Reproduction / Miscellaneous			$5,000	*Assume OnLine Service*
Legal/Advertising			$5,000	
Material Testing			$25,000	
		Subtotal Indirect Project Costs:	**$673,000**	
Owner's Contingency		***(10% of all costs):***	**$373,000**	
		Total Phase I Cost:	**$4,103,000**	

Attachment2.a: Sudbury FD - Option 1 - Complied - Handout V3 (3620 : Fire Station #2 presentation on construction options)

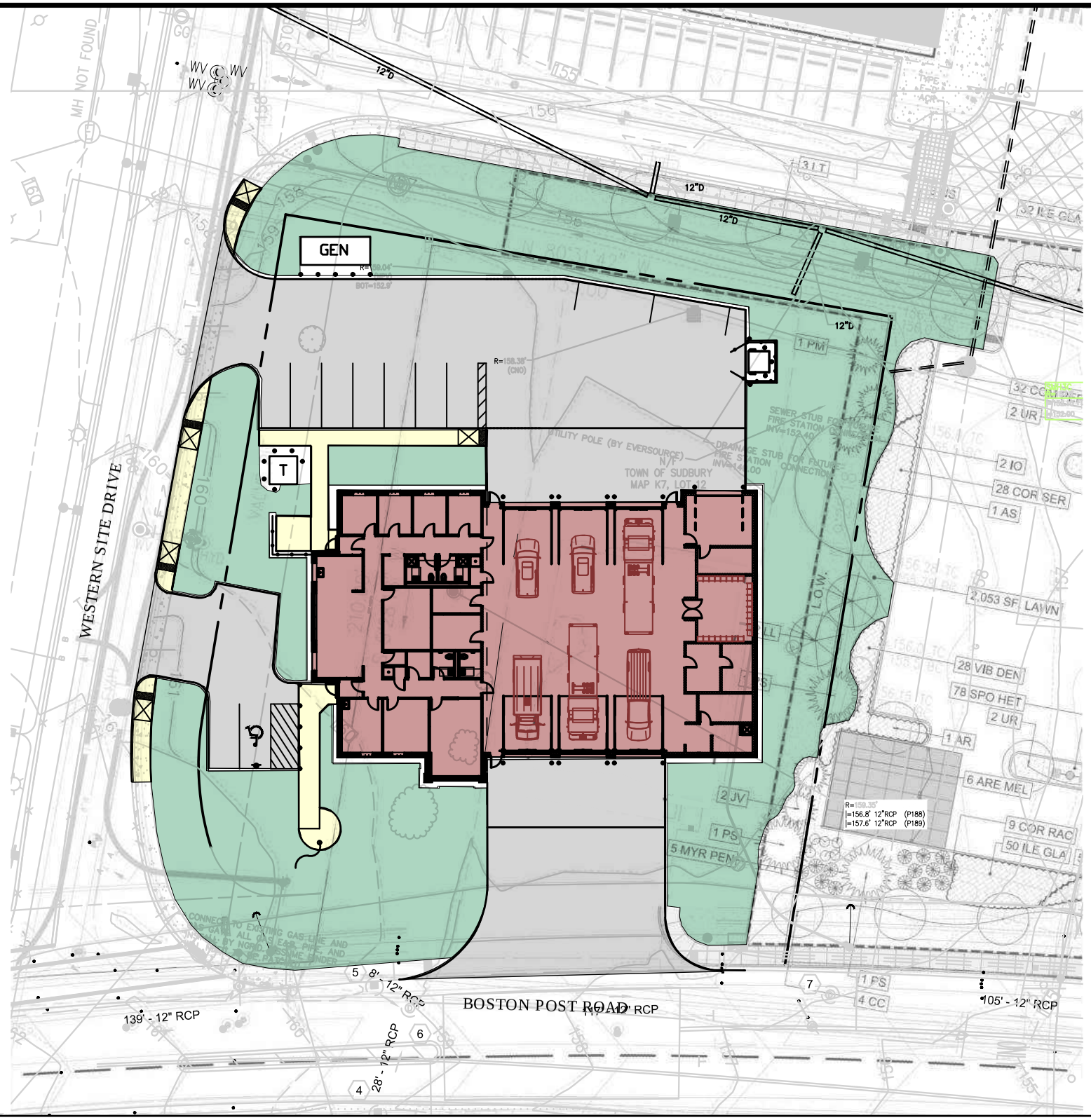

SCALE: 1" = 40'-0"

SUDBURY FIRE DEPARTMENT - STATION NO. 2 PHASE 2

550 BOSTON POST ROAD
SUDBURY, MA
January 29, 2018

KAESTLE BOOS associates, inc

© COPYRIGHT KAESTLE BOOS ASSOC., INC. 2017

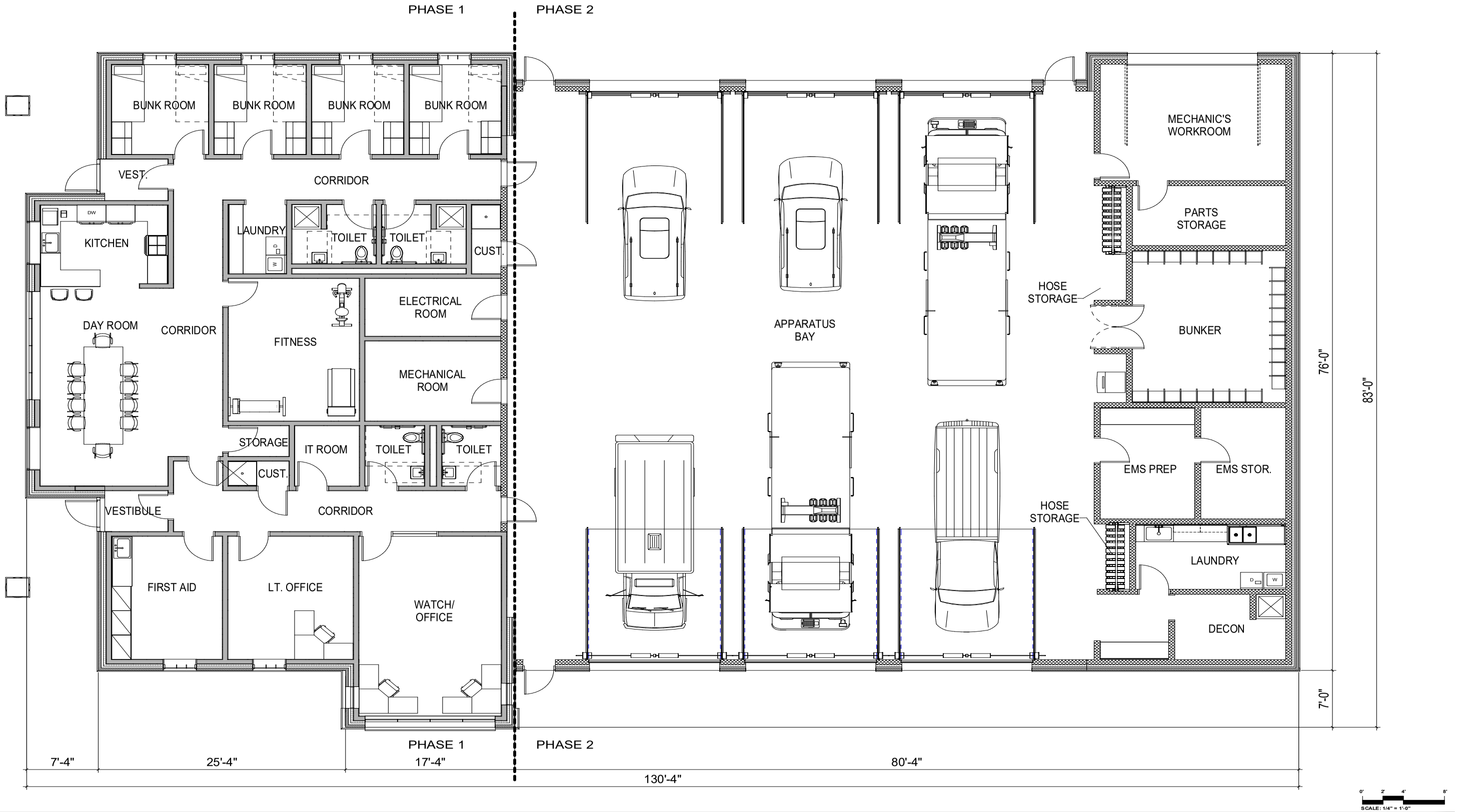

SUDBURY FIRE DEPARTMENT - STATION NO. 2 PHASE 2

550 BOSTON POST ROAD
SUDBURY, MA

KAESTLE BOOS associates, inc

2017 © COPYRIGHT KAESTLE BOOS ASSOC., INC.

SUDBURY FIRE DEPARTMENT - STATION NO. 2 PHASE 2

550 BOSTON POST ROAD
SUDBURY, MA

KAESTLE BOOS associates, inc

2017 © COPYRIGHT KAESTLE BOOS ASSOC., INC.

SUDBURY FIRE DEPARTMENT - STATION NO. 2 PHASE 2

550 BOSTON POST ROAD
SUDBURY, MA

KAESTLE BOOS associates, inc

© COPYRIGHT KAESTLE BOOS ASSOC., INC. 2017

Sudbury Fire Station 2

September, 2019

Opinion of Probable Costs
Schematic Design Level: PHASE II

KAESTLE BOOS associates, Inc

Description			Subtotals/ Total	Comments
Construction Costs				
Demolition			$19,000	
Hazmat Abatement			$25,000	Allowance
Sitework			$472,235	
New Building Construction	6,626	SF	$2,498,111	
		Subtotal:	$3,014,346	
Schematic Level Estimating Contingency	@	10.0%	$301,435	
		Subtotal Direct Construction Costs:	**$3,315,781**	
General Conditions & Overhead	@	8.00%	$265,262	
Insurance	@	1.00%	$35,810	
Bonds	@	0.65%	$23,510	
GC Fee (Profit)	@	3.00%	$109,211	
Permit Fee	@	1.50%	Waived by Town	*Confirm*
Escalation (Bid 1st Quarter of 2024)	@	23.75%	$890,426	
		Subtotal Construction Cost:	**$4,640,000**	
Indirect Project Costs				
Temp Apperatus Enclosure			$250,000	*Allowance (12 mon. rent)*
Arch.& Eng.Fees			$383,000	
Add Services & Reimbursables			$50,000	
Peer Review			$6,000	
Owner's Project Manager			$231,000	
Firematic Equipment			$150,000	*Allowance*
Furniture & Furnishings			$15,000	*Allowance*
Communications Equipment			$20,000	*Owner's Allowannce*
Moving			$30,000	
Bid Doc Reproduction / Miscellaneous			$5,000	*Assume OnLine Service*
Legal/Advertising			$5,000	
Material Testing			$35,000	
		Subtotal Indirect Project Costs:	**$1,180,000**	
Owner's Contingency		***(10% of all costs):***	**$583,000**	
		Total PHASE II Cost:	**$6,403,000**	

Attachment2.a: Sudbury FD - Option 1 - Complied - Handout V3 (3620 : Fire Station #2 presentation on construction options)

Sudbury Fire Station 2

September, 2019

Room and Size Shcudule

KAESTLE BOOS associates, inc

Room Name	Length x Width	Area	Comments
PHASE 1			
BUNK ROOM	10'-0" x 11'-0"	110 SF	Phase 1
BUNK ROOM	10'-0" x 11'-0"	110 SF	Phase 1
BUNK ROOM	10'-0" x 11'-0"	110 SF	Phase 1
BUNK ROOM	10'-0" x 11'-0"	110 SF	Phase 1
CUST.	6'-0" x 3'-0"	18 SF	Phase 1
CUST.	3'-0" x 8'-0"	24 SF	Phase 1
DAY ROOM	12'-6 x 24'-0"	300 SF	Phase 1
ELECTRICAL ROOM	14'-0" x 7'-0"	98 SF	Phase 1
FIRST AID	11'-6" x 15'-0"	171 SF	Phase 1
FITNESS	13'-6" x 17'-6"	236 SF	Phase 1
FRONT VESTIBULE	7'-0" x 5'-0"	35 SF	Phase 1
IT ROOM	7'-0" x 7'-0"	49 SF	Phase 1
KITCHEN	13'-0" x 10'-6"	136 SF	Phase 1
LAUNDRY	6'-0" x 8'-0"	48 SF	Phase 1
LT. OFFICE	13'-0" x 15'-0"	195 SF	Phase 1
MECHANICAL ROOM	14'-0" x 10'-0"	140 SF	Phase 1
REAR VESTIBULE	7'-0" x 5'-0"	35 SF	Phase 1
STORAGE	6'-0" x 4'-0"	23 SF	Phase 1
TOILET	6'-3" x 7'-3"	45 SF	Phase 1
TOILET	8'-6" x 7'-6"	65 SF	Phase 1
TOILET	8'-6" x 7'-6"	65 SF	Phase 1
TOILET	6'-3" x 7'-3"	45 SF	Phase 1
WATCH / OFFICE	15'-0" x 22'-0"	330 SF	Phase 1
		2,498 SF	
PHASE 2			
APPARATUS BAY	61'-0" x 70'-6"	4300 SF	Phase 2
BUNKER	16'-0" x 18'-6"	296 SF	Phase 2
DECON	11'-6" x 8'-0"	92 SF	Phase 2
EMS PREP	9'-6" x 14'-0"	133 SF	Phase 2
EMS STOR.	8'-6" x 14'-0"	119 SF	Phase 2
HOSE STOR.	3'-0" x 14'-0"	42 SF	Phase 2
HOSE STOR.	3'-0" x 8'-6"	26 SF	Phase 2
LAUNDRY	15'-6" x 8'-0"	124 SF	Phase 2
MECHANIC'S WORKROOM	19'-0" x 14'-6"	275 SF	Phase 2
PARTS STORAGE	7'-6" x 16'-0"	120 SF	Phase 2
		5,527 SF	

Attachment2.a: Sudbury FD - Option 1 - Complied - Handout V3 (3620 : Fire Station #2 presentation on construction options)

Sudbury Fire Station 2

September, 2019

Opinion of Probable Costs
Schematic Design Level: Full Project

KAESTLE BOOS associates, inc

Description			Subtotals/ Total	Comments
Construction Costs				
Building Demolition			$20,000	
Hazmat Abatement			$15,000	*Allowance*
Sitework			$770,140	
New Building Construction	9,354	SF	$4,012,506	
Subtotal:			$4,817,646	
Schematic Level Estimating Contingency	@	10.0%	$481,765	
Subtotal Direct Construction Costs:			**$5,299,411**	
General Conditions & Overhead	@	7.50%	$397,456	
Insurance	@	1.00%	$56,969	
Bonds	@	0.65%	$37,400	
GC Fee (Profit)	@	3.00%	$173,737	
Permit Fee	@	1.50%	Waived by Town	*Confirm*
Escalation (Bid 1st Quarter of 2021)	@	8.75%	$522,027	
Subtotal Construction Cost:			**$6,487,000**	
Indirect Project Costs				
Temp Relocation			$240,000	*Allowance*
Land Survey			$5,000	*(incorp. additional land)*
Geotechnical Investigation			$10,000	
Arch.& Eng.Fees			$513,000	
Add Services & Reimbursables			$50,000	
Peer Review			$5,000	
Owner's Project Manager			$258,000	
Firematic Equipment			$150,000	*Allowance*
Furniture & Furnishings			$90,000	*Allowance*
Communications Equipment			$50,000	*Owner's Allowannce*
Network & Computers			$25,000	*Owner's Allowannce*
Utility Backcharge			$20,000	*Allowance*
Moving			$25,000	
Bid Doc Reproduction / Miscellaneous			$5,000	*Assume OnLine Service*
Legal/Advertising			$5,000	
Material Testing			$25,000	
Subtotal Indirect Project Costs:			**$1,476,000**	
Owner's Contingency	***(10% of all costs):***		**$799,000**	
Total Project Cost:			**$8,762,000**	

Attachment2.a: Sudbury FD - Option 1 - Complied - Handout V3 (3620 : Fire Station #2 presentation on construction options)

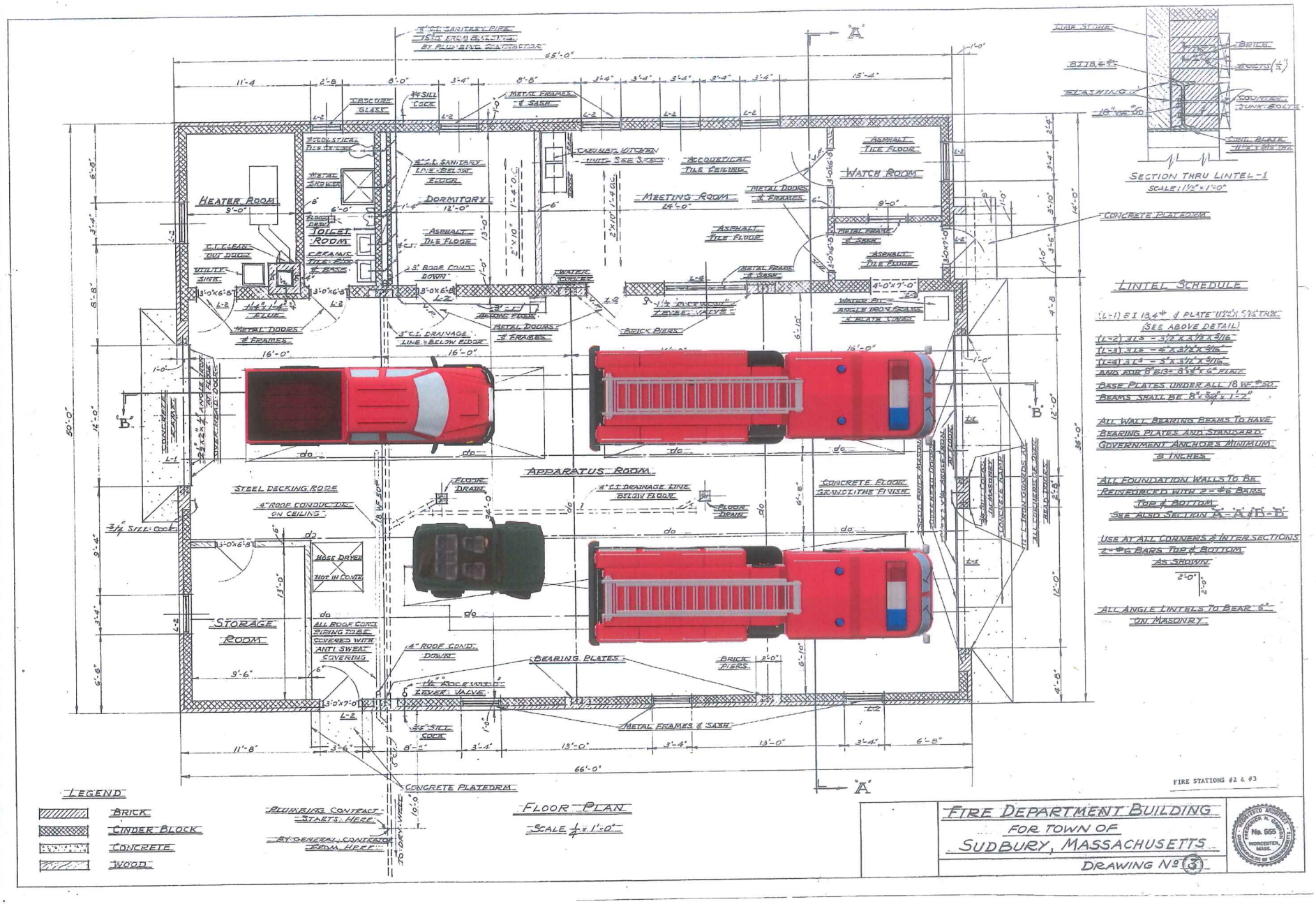

Attachment2.b: Station 2 Building_Apperatus Plan V1 (3620 : Fire Station #2 presentation on construction options)

SUDBURY FIRE DEPT.

17733	Horton Emergency Vehicles	REV.
	DRAWN BY: JAT	9/25/16

603 PASS THROUGH
FORD CHASSIS

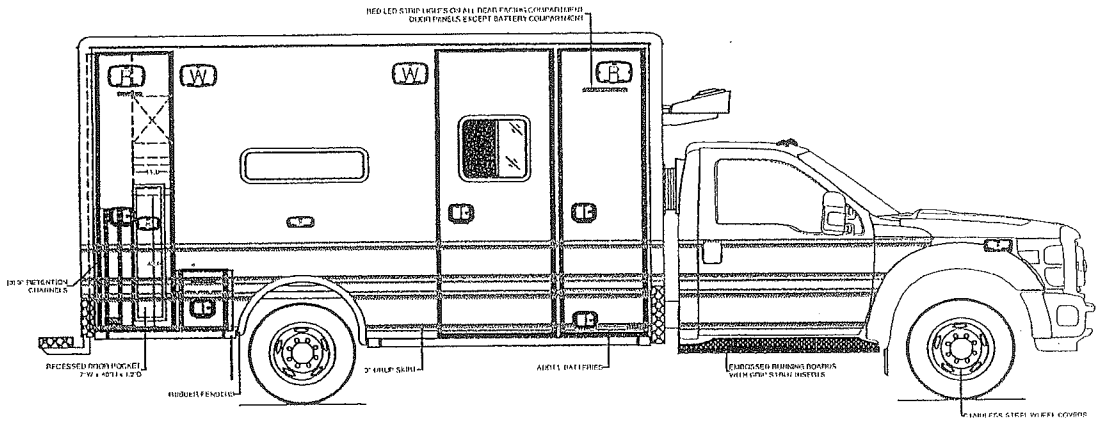

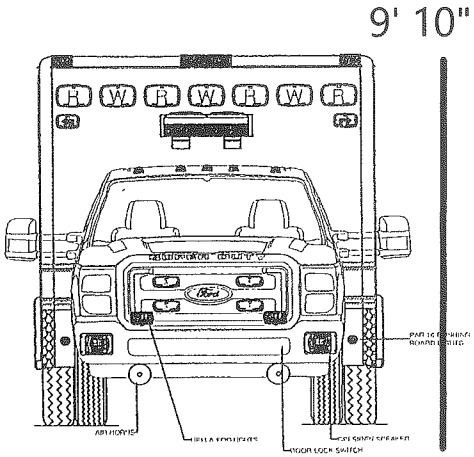

9 '

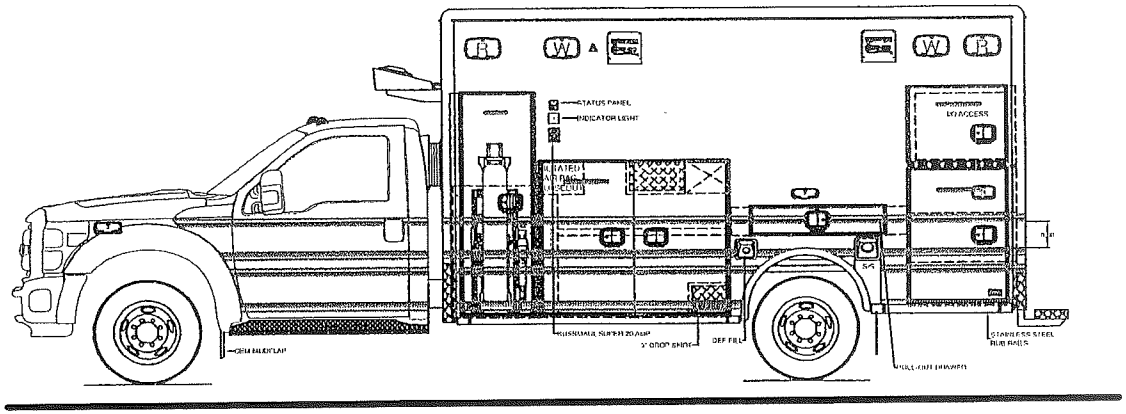

25 '

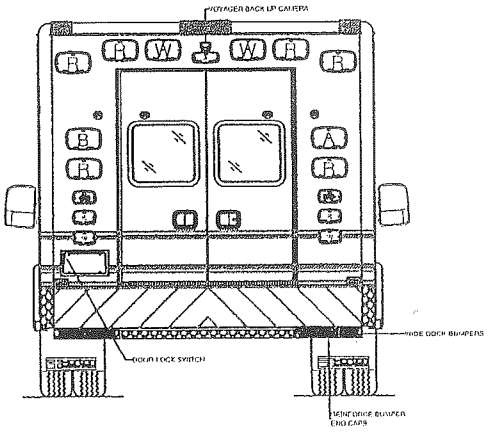

NOTE: DRAWINGS ARE FOR GRAPHICAL REPRESENTATION ONLY
DIMENSIONS ARE APPROXIMATE & MAY VARY DURING CONSTRUCTION

SPECIFICATION DRAWING

SUDBURY BOARD OF SELECTMEN
Tuesday, January 7, 2020

MISCELLANEOUS (UNTIMED)

3: National Development Alcohol License Special Act

REQUESTOR SECTION
Date of request:

Requestor: National Development

Formal Title: Discuss and vote whether to sponsor 2020 Annual Town Meeting article to adopt legislation allowing the Town to grant one (1) additional alcoholic beverages serving license. National Development to represent ownership group, BPR Sudbury LLC, in the request for the issuance of a liquor license to support the addition of a restaurant to the retail lineup at Meadow Walk.

Recommendations/Suggested Motion/Vote: Discuss and vote whether to sponsor 2020 Annual Town Meeting article to adopt legislation allowing the Town to grant one (1) additional alcoholic beverages serving license. National Development to represent ownership group, BPR Sudbury LLC, in the request for the issuance of a liquor license to support the addition of a restaurant to the retail lineup at Meadow Walk.

Background Information:
attached documents:
- warrant article draft
- alcohol license rules & regs
- alcohol license quotas
- meadow walk presentation of 12/3/19

Financial impact expected:

Approximate agenda time requested:

Representative(s) expected to attend meeting: Steve Senna, VP National Development and Leah Harsfield, VP of Asset Management

Review:

Patty Golden	Pending	
Maryanne Bilodeau	Pending	
Jonathan Silverstein	Pending	
Daniel E Carty	Pending	
Board of Selectmen	Pending	01/07/2020 7:00 PM

ARTICLE __ Authorize Board of Selectmen to Petition for an Additional Alcohol Pouring License for Meadow Walk Development

To see if the Town will vote to authorize the Board of Selectmen to petition the General Court to adopt legislation allowing for the Town to grant one (1) additional license for the sale of all alcoholic beverages to be drunk on the premises to the holder of a common victualler license for a sit-down restaurant located within the development known as Meadow Walk, 534 Boston Post Road, in Buildings 2,3,4 or 5, within the "Mixed-Use Overlay District" as more particularly shown on a plan on file with the town clerk; provided, however, that the General Court may make clerical or editorial changes of form only to the bill, unless the Board of Selectmen approve amendments to the bill before enactment by the General Court; and, provided further that the Board of Selectmen is hereby authorized to approve amendments which shall be within the scope of the general public objectives of this petition, or take any other action related thereto.

Attachment3.a: warrant_article_re__Meadow_Walk_-_alc__license_special_act_ (3609 : National Development Alcohol License Special Act)

Town of Sudbury

Office of Selectmen

Alcohol Rules and Regulations

Overview:

The following guidelines and regulations, developed by the Board of Selectmen, are designed to provide Liquor License holders in the Town of Sudbury with a clear understanding of the expectations of the Board of Selectmen as the Local Liquor Licensing Authority.

Licensees are required to adhere to the provisions of these regulations, as well as other Federal, State and local laws and regulations. If the Local Licensing Authority (LLA) or its designated representative determines that there exists satisfactory proof of such a violation(s), the Local Licensing Authority, or its designated representative, may take, after appropriate public meeting or hearing, disciplinary action, which may include oral warning, written warning, suspension of license, modification of license, non-renewal of license and/or revocation, depending upon the seriousness of the offense(s) and the judgment of the Local Licensing Authority.

Any situation not expressly covered by these regulations shall be addressed in accordance with the latest publication, guidelines or advisories of the Alcoholic Beverages Control Commission, as deemed appropriate by the LLA and adjudicated on a case-by-case basis by the Issuing Authority.

All regulatory considerations shall serve as guidelines to the Board of Selectmen in their deliberations regarding liquor license matters in accordance with Chapter 138 of the General Laws of the Commonwealth of Massachusetts and the Regulations of the Town of Sudbury.

The Board of Selectmen, as Local Licensing Authority, reserves the right to follow or deviate from these general guidelines, when in the judgment of the Board of Selectmen, it is warranted in the interest of public safety.

Attachment3.b: Alcohol Rules and Regs_nr (3609 : National Development Alcohol License Special Act)

General Considerations:

The Board of Selectmen, also referred to in this document as the Local Licensing Authority (LLA), has designated in matters of administrative filings, paperwork, and correspondence, the Selectmen's office as its representative.

The Board of Selectmen also designates the Sudbury Police Department, Sudbury Fire Department, Sudbury Building Inspector, Sudbury Board of Health, and Town Manager to act as representatives regarding compliance of regulations.

Licensees should note that the LLA has directed that the Sudbury Police Department will, on regular occasion, and no less than once per year, conduct *"compliance checks"* of each establishment to ensure rules and regulations are adhered to. These include postings, licensure, and conduct of a licensee with regard to State and local regulations.

Violations of regulations will be reported to the LLA/Board of Selectmen by the appropriate town bodies and pursued in accordance with these guidelines.

The LLA considers first and foremost the protection of Sudbury residents, and in particular Sudbury youths. Violations which relate directly to over-serving or serving of minors, whether reported through inspection or as a result of a criminal or safety complaint, may be considered with more gravity than those reported as administrative in nature.

Violations:

A. Upon written notice from the Chief of Police or other source that an infraction has allegedly occurred at a licensed establishment or other matters that the Chief of Police, or designated representatives of the LLA, deems should be brought to the attention of the Board, the Board will consider in open session whether or not a public hearing should be held.

B. If it is determined that a public hearing will be held by vote of the LLA, the Selectmen's office shall send via certified mail or direct an agent to deliver a written notice to the applicant outlining the proposed hearing date/time. The licensee is obligated to acknowledge the receipt of same and confirm they will appear at the scheduled hearing.

C. Any hearing will normally occur within the following two (2) scheduled meetings of the Board of Selectmen (LLA) after the vote of the LLA to conduct such hearing, unless the LLA determines there are extenuating circumstances necessitating a deviation from normal protocol.

D. At the hearing, the LLA will first hear evidence from the Police Chief (or his/her designee) and his/her agents and/or witnesses or from other complaining party, as

Attachment3.b: Alcohol Rules and Regs_nr (3609 : National Development Alcohol License Special Act)

may be appropriate. Then the licensee and/or the licensee's counsel will have an opportunity to present their response and evidence.

E. After all testimony has been given, the LLA reserves the right to question all witnesses and parties and, if necessary, take under advisement all facts and vote either to render their decision, or continue the hearing to a subsequent meeting of the LLA.

Disciplinary Remedies/General Approach:

A. In matter of a first offense, the LLA, or their designee, may issue a verbal warning or letter of reprimand to the owner, licensed manager or managing employee present. If the violation is deemed particularly egregious or a public safety issue, the LLA may consider whether a suspension, revocation or any other action, to include re-training, is warranted at that time, given the nature of the offense.

B. In matter of a second offense in a period of sixty (60) months, the LLA may consider imposing a suspension of 1 to 3 days, which can be deferred for up to a period of twelve (12) months, provided that during the period of suspension of this penalty, which shall be from the date of said vote until the end of the suspension period, the licensee shall not have engaged in any other conduct prohibited by Chapter 138 or the regulations promulgated herein. In considering the type of violation and the fact this is deemed a second offense, the LLA may consider revocation or any other action, to include re-training, given the nature of the offense.

C. In matter of a third violation within sixty (60) calendar months, the LLA may consider the issuance of a suspension for a period of 3 to 14 days, the suspension or any part thereof, may be deferred for a period up to twenty-four (24) months, provided that during the period of suspension of this penalty, which shall be from the date of said letter until the end of the suspension period, the licensee shall not have engaged in any other conduct prohibited by Chapter 138 or the regulations promulgated herein. In considering the type of violation and the fact this is deemed a third offense, the LLA may consider revocation or any other action, to include re-training, given the nature of the offense.

D. Additional violations within the sixty (60) calendar month window will be dealt with in a progressive manner commensurate with the violation.

E. Any failure to comply with the stipulations contained within the entire policy may be considered a violation by the LLA.

Attachment3.b: Alcohol Rules and Regs_nr (3609 : National Development Alcohol License Special Act)

F. When a violation has been deemed to have occurred, the licensee shall provide a written explanation to the LLA of how the violation occurred and a detailed plan as to corrective measures.

G. If an establishment incurs a violation and then remains violation free for a period of 60 months, the next following violation may be considered as a First Offense.

Other Causes for Revocation, Suspension & Modification/Inspections & Investigations:

A. All licensed premises shall be subject to inspection by the Police Department of the Town of Sudbury and other duly authorized representatives of the LLA.

B. Failure or refusal of the licensee to furnish or disclose any information required by any provision of the General Laws or by any rule or regulation of the Alcoholic Beverages Control Commission or any rule or regulation of the LLA, may be considered by the LLA a violation of the rules and regulations of the LLA.

C. Any person who hinders or delays a police officer or other authorized agent of the LLA in the performance of the agent's duties, who refuses to admit or locks out any such agent from any place which such agent is authorized to inspect, or who refuses to give a designated agent such information as may be required for the proper enforcement of the General Laws, Chapter 138, shall be punished by a fine of not less than fifty ($50) and not more than two hundred dollars ($200) or by imprisonment for not more than two (2) months or both.

D. Failure to pay Town real estate and/or personal property taxes or State meals and/or sales taxes may be considered by the LLA to be in violation of the rules and regulations contained hereunder.

Illegal Activity on the Licensed Premises:

A. Licensees shall make all reasonable and diligent efforts to ensure that illegal activities do not occur at the licenses premises. Such efforts may include, but are not limited to:

1) Calling for police and medical assistance as necessary to protect patrons against injury, to evict unruly patrons, to uncover unlawful conduct, or to give medical assistance and providing police with requested information.

2) Frequent monitoring of restrooms and other nonpublic areas of the premises for signs of drug activity or other illegalities.

Attachment3.b: Alcohol Rules and Regs_nr (3609 : National Development Alcohol License Special Act)

B. It is the affirmative responsibility of the Licensee to report any illegalities discovered on the premises.

Renewals & Modifications:

A. The LLA reserves the right to obtain updated information about a renewal applicant/manager/owner at the time of renewal.

B. Renewal or modifications of said licenses shall follow the separate fee schedule as established in the Selectmen's Policies and Procedures "Fee Schedule."

Posting & Signs:

A. Licenses issued by the Board shall be posted in a conspicuous place easily seen by the public where they can be read without difficulty or assistance of employees.

B. All other licenses, permits and certificates affecting the licensed premises shall be posted conspicuously; provided, however, that no such document shall be posted in such a way as to cover any part of the license issued by the Board.

C. The posting or presentation of any photographs, signs, posters, drawings or other matter that is of an improper or objectionable nature in the public areas of the licensed premises is prohibited. The material presented must be suitable for view by members of the general public in the same manner as if it were located in other public areas such as public ways, public parks, government offices, or business offices.

D. Failure to comply with any stipulations outlined in this section of the policy may be considered a violation.

Entertainment at Premises:

A. No licensee may provide entertainment of any kind unless the licensee holds an entertainment license issued pursuant to the General Laws, Chapter 140, §183A.

B. No entertainment at the licensed premises may be conducted in a manner such that the noise from the entertainment is creating a nuisance and can be heard beyond the boundaries of the premises.

C. No dancing by patrons is permitted except upon proper licensing pursuant to General Laws, Chapter 140, §183A, and confined to a particular dance floor area which has been approved by the Local Licensing Authority and which is not inconsistent with the entertainment license requirements.

Attachment3.b: Alcohol Rules and Regs_nr (3609 : National Development Alcohol License Special Act)

D. No licensee may permit any electronic games to be on the premises unless such machines are properly licensed pursuant to General Law, Chapter 140, §177A.

E. Licensees shall not permit any games to be played at the premises for money, alcoholic beverages, or for any other prize. Games may be played for money at certain fundraising activities which have been approved by the appropriate authority and for which the licensee holds other appropriate licenses.

Hours of Operation:

A. The licensee and his/her employees may be upon the premises during the time the establishment is closed to the public only for the purpose of cleaning, making emergency repairs, providing security for the premises, or preparing food for the day's/next day's business or for opening/closing the business in an orderly manner.

B. No alcoholic beverages shall be served except during those hours delineated on the license approved by the LLA, which establishes the outer parameters during which alcoholic beverages may be served.

C. Not less than fifteen (15) minutes prior to the closing hour of the premises, the licensee or his employees shall advise all patrons of the time remaining to closing.

D. At a time no later than the time designated as the closing hour on the Liquor License, all glasses, bottles and unconsumed drinks will be surrendered by patrons.

E. Patrons shall not be allowed on the premises for more than fifteen (15) minutes beyond the closing time.

F. Licensees shall ensure that their patrons leave the premises in an orderly manner. Licensees who have a clientele that regularly fails to leave the area in a quiet and orderly manner shall hire security personnel to supervise the leave-taking of the patrons at closing time.

G. No patron shall be allowed to enter the premises during the time the establishment is required to be closed.

H. The LLA, or its agents, may enter the premises during the hours it is open to the public and at such other times as any persons are upon the premises, for the purpose of inspecting the premises and enforcing these rules and regulations.

Attachment3.b: Alcohol Rules and Regs_nr (3609 : National Development Alcohol License Special Act)

Code - Fire/Health/Capacity:

A. No license shall be issued or shall be considered in good standing unless the licensed premises complies with all statutory requirements, including all applicable building codes, and fire, health, safety, trash and other government regulations and laws.

B. All premises covered by the license shall be kept in a clean and sanitary condition.

C. No outside area shall be used as a gathering place for patrons unless approved by the LLA and the ABCC, if alcohol is consumed.

D. All public areas in licensed premises shall be lighted in a manner sufficient for the safety of the patrons and in a manner sufficient for the agents of the LLA to make observations at the premises without the need to identify themselves or seek assistance.

Service of Suspension Orders:

A. When the Local Licensing Authority suspends the license or licenses of any licensee, it shall provide the licensee with an order of suspension for public display that must contain the words, "Closed per order of the Licensing Board for the Town of Sudbury." Such an order shall be publicly displayed by the licensee in the following manner. The order shall be readily seen from the street by being affixed to the door of the entrance to the premises or a window facing the street upon which the door opens.

B. Depending on the severity of the violation, the LLA may vote to implement the suspension in two ways:

1. The licensee may be allowed to remain open for service of food only and must comply with the other stipulations delineated for suspension of their license.
2. The licensee will be required to close in their entirety, not being allowed to continue with the sale of food and must comply with the other stipulations delineated for suspension of their license.

C. Suspension orders of the LLA shall remain affixed throughout the entire period of suspension. The removal, covering, defacement, obliteration of the order of suspension, or the failure to maintain the order of suspension in the manner and place required prior to the expiration of the suspension period shall be deemed the act of the licensee and shall be cause for further suspension, modification or revocation of the license.

Attachment3.b: Alcohol Rules and Regs_nr (3609 : National Development Alcohol License Special Act)

D. Suspension periods may not be used as a time to make renovations at the licensed premises unless such renovations have previously been approved by the appropriate governing Board.

E. No members of the public may be on the premises at any time during suspension periods, with the exception that restaurants may be able to continue to service patrons without serving alcohol with the approval of the Local Licensing Authority.

Other Business Responsibilities:

A. Licensees shall immediately notify the Local Licensing Authority of any proceedings brought against them (or by them) under the Bankruptcy Act, or of any other proceedings, in court or otherwise, which may affect the status of the license.

B. The licensee is responsible for ensuring that all employees who work in the public areas of the premises read the Rules and Regulations of the LLA and ABCC, and comply with all rules and laws.

C. There shall be no alcoholic beverages brought onto or transported from the premises of a licensed establishment except for deliveries for the operation of the business as controlled by the laws, rules and regulations of the Commonwealth of Massachusetts, or regulations of the Town of Sudbury or as allowed for under 204 CMR 2.18 Resealing of Partially Consumed Bottles of Wine.

Employee Training:

A. Any licensee holding an All Alcoholic, or Beer and Wine License shall participate in a program designed to train employees who engage in either package sales or pouring in methods of observation and detection to avoid selling or serving to intoxicated persons and/or minors. This program will be based on the type of license issued.

B. Listed below are programs currently available which meet the requirements of this policy:

1) Techniques of Alcohol Management (T.A.M.), sponsored by the Mass. Package Store Association;

2) Training for Intervention Procedures by Servers of Alcohol (TIPS), offered by Health Communications, and Alcohol Intervention Methods (AIM) Campbell/Trent;

3) ServSave – recommended by the National Restaurant Association;

Attachment3.b: Alcohol Rules and Regs_nr (3609 : National Development Alcohol License Special Act)

4) Any Insurance Industry approved and qualified program offered by a certified trainer and previously approved by the Board of Selectmen.

C. All personnel shall be required to participate in a training program based on the type of license issued. Establishments shall comply with this policy by having all of its eligible employees trained and certified.

D. All establishments must maintain a roster or certificate of trained personnel in an accessible place during operating hours. An updated roster shall be submitted with the annual application for renewal of the license. The roster shall include:

1. Employee name
2. Employee date of birth
3. Employee social security number
4. Type of training (license)
5. Date valid
6. Date of expiration
7. Date of hire

All personnel shall be required to be re-certified once every three (3) years by an approved program, as noted above.

E. Failure to comply with this policy may result in suspension or revocation of the license. Fines may also be levied against the license holder should any violation of this policy occur.

Food Service:

A. Coinciding with the service of alcoholic beverages, licensees must serve food. Following the close of the full menu, licensees must provide, at a minimum, five (5) assorted items up until thirty (30) minutes before closing. The proposed assorted items will be submitted to the LLA for approval upon request for the original license or renewal. The LLA will approve said items with the understanding that chips, pretzels, popcorn or similar snacks will not suffice.

B. Any deviation from the approved limited menu must be submitted to the LLA for approval.

Attachment3.b: Alcohol Rules and Regs_nr (3609 : National Development Alcohol License Special Act)

Town of Sudbury
Alcohol License Quota & Availability

ALCOHOL LICENSEES

RESTAURANT/CLUB
M.G.L. C.138 §12

All Alcohol	Wine & Malt
Acapulcos	Chili Basil
American Legion Post #191	CJ's
Bosse Sports & Health Club	Franco's Trattoria
Bullfinch's	Oishii Too Sushi Bar
Conrad's	Rossini's
Da Vinci Bistro	*None Available*
El Basha	
Fugakyu Café	
Lavender Asian Cuisine	
Longfellow's Wayside Inn	
Lotus Blossom	
Max and Leo's	
Oak Barrel Tavern	
Paani	
Riceberry	
Soul of India	
Twenty-Nine	
Victory Cigar Bar	
None Available	

Quota:	18	5
Total Issued/Pending:	18	5
Available:	**0**	**0**

PACKAGE STORE
M.G.L. C.138 §15

All Alcohol	Wine & Malt
Danny's	Sperry's Wine
Duck Soup	Sudbury Craft Beer
Stony Brook	Sudbury Farms
Sudbury Wines, Spirits	*1- Available*
None Available	*2- Available*

Quota:	4	5
Total Issued/Pending:	4	3
Available:	**0**	**2**

Updated January 6, 2020

Attachment3.c: Alcohol License Quotas (3609 : National Development Alcohol License Special Act)

Quota System

The Massachusetts Liquor Control Act places a quota or limit on the number of alcoholic beverages licenses a city or town can issue. The quota is based on the population of the community as determined by the most recent federal census.

On-Premises License (M.G.L. c. 138, §12)
Each city or town may grant one on-premises all alcoholic license for each unit of 1,000 persons (or fraction thereof) with a minimum of 14. An additional all-alcoholic beverages license may be granted for each population unit of 10,000 (or fraction thereof) over the first 25,000. One wine and malt license may be granted for each unit of 5,000 persons (or fraction thereof) with a minimum of 5.

Veteran's Club License
The local licensing authority may grant an all-alcoholic beverages license, outside the quota system, subject to ABCC approval, to any corporation whose members are war veterans which owns, hires or leases a building, or space in a building, for the use and accommodation of a post of any war veterans' organization incorporated by the Congress of the United States, to sell to members of that post only, and, subject to local licensing authorities, to guests introduced by such members and to no others.

Off-Premises (M.G.L. c. 138, §15)
Each city or town may issue one off-premises (Section 15) all-alcoholic beverages license for each unit of 5,000 persons (or fraction thereof) with a minimum of 2. One wine and malt license may be granted for each unit of 5,000 persons (or fraction thereof) with a minimum of 5.

Seasonal Licenses
The LLA may issue as many seasonal on-premises alcoholic beverages licenses as it deems to be in the public interest that are effective April 1st to January 15th or any portion thereof.

The LLA may issue a limited number of seasonal off-premises alcoholic beverages licenses based on an estimate of the temporary increase in resident population for the upcoming season as of July 10th. The LLA must set the estimate before March 1st of the calendar year, at a special meeting described in detail by M.G.L. c. 138, §17. The LLA must submit the estimate to the Commission prior to April 1st.

The LLA may issue off-premises seasonal licenses based on that estimate at the rate of one license for each 5,000 persons (or fraction thereof) and can be issued effective April 1st to November 30th until January 15th, or any portion thereof, as set by the LLA. Franklin and Berkshire counties may issue winter seasonal licenses and estimate before October 15th the temporary increased resident population as of the following February 10th. Such licenses are effective from December 1st to April 1st.

Source: http://www.mass.gov/abcc/faqs.htm

Attachment3.c: Alcohol License Quotas (3609 : National Development Alcohol License Special Act)

MEADOW WALK

SUDBURY

Presentation to the Board of Selectmen

DECEMBER 3, 2019

Jack O'Neil, Managing Partner

Steve Senna, VP – Development Project Manager

NATIONAL DEVELOPMENT

Attachment3.d: Meadow Walk Presentation 12.3.19 (3609 : National Development Alcohol License Special Act)

SITE PLAN

MEADOW WALK SUDBURY

- 75,000 SF of commercial/ retail and restaurants space anchored by 40,000 SF Whole Foods Market
- Spaces available between 1,500 and 8,200 SF with restaurant and fitness opportunities
- 3 luxury residential communities, including 360+ units and Bridges Senior Housing

MEADOW WALK SUDBURY

Attachment3.d: Meadow Walk Presentation 12.3.19 (3609 : National Development Alcohol License Special Act)

AVAILABILITY:

[redacted]

BUILDING 2
8,267 SF

BUILDING 3
2,119 SF

BUILDING 5
2,576 SF

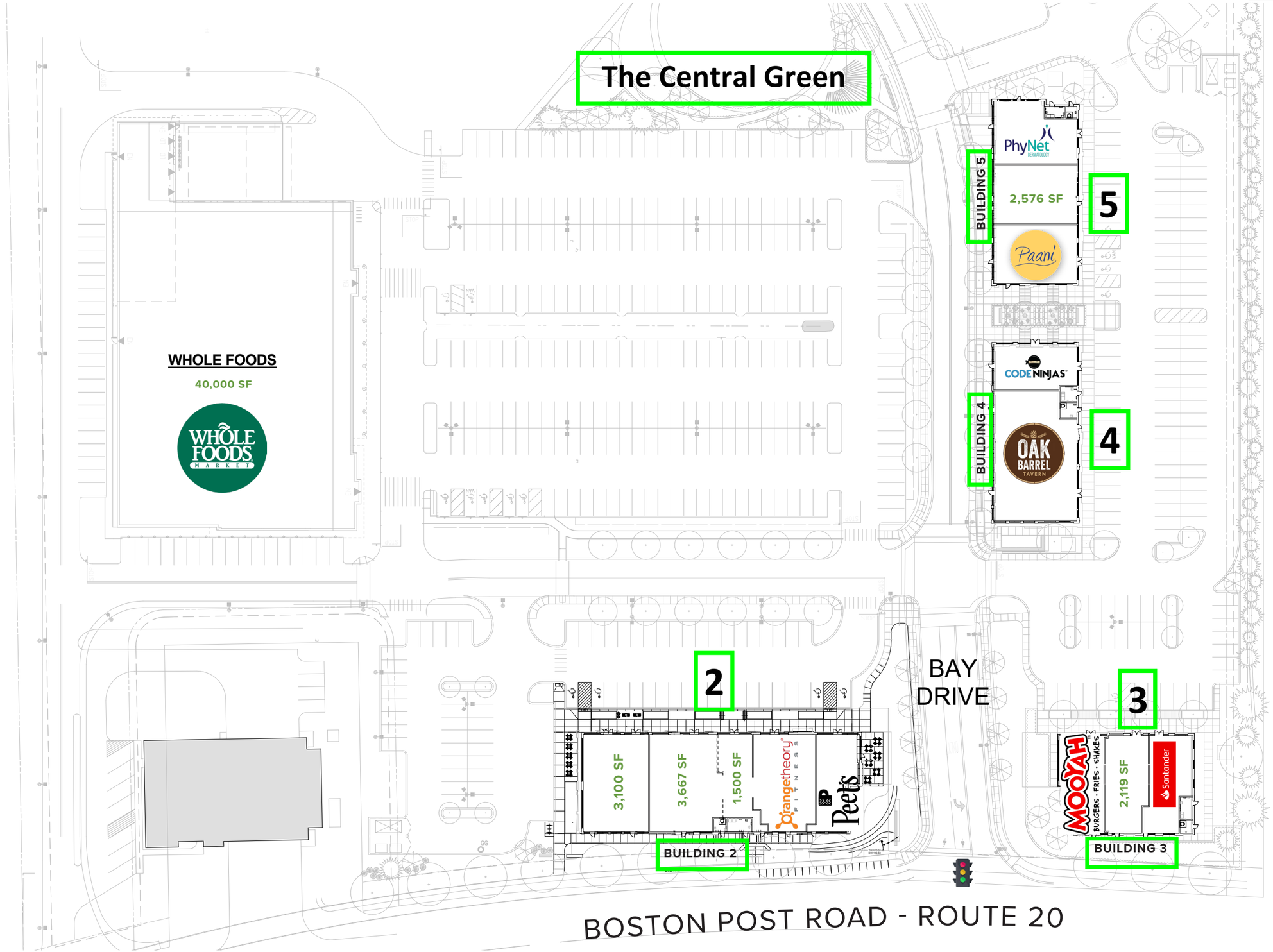

Attachment3.d: Meadow Walk Presentation 12.3.19 (3609 : National Development Alcohol License Special Act)

5
4
2
3

RESTAURANT AND RETAIL SPACES FROM 1,500 - 8,200 SF AVAILABLE TODAY

NEW WHOLE FOODS MARKET

VIBRANT MIXED USE RETAIL

FAMILY FRIENDLY RESTAURANTS

PUBLICLY ACCESSIBLE OPEN SPACES

LUXURY APARTMENTS

BRIDGES SENIOR HOUSING

[redacted]

MEADOW WALK
SUDBURY

[redacted]

Attachment3.d: Meadow Walk Presentation 12.3.19 (3609 : National Development Alcohol License Special Act)

WHOLE FOODS MARKET
WHOLE FOODS MARKET

Pnani

Peet's Coffee

Peet's Coffee
NOW OPEN

SUDBURY BOARD OF SELECTMEN
Tuesday, January 7, 2020

MISCELLANEOUS (UNTIMED)

4: Discussion on TMgr candidate interview process

REQUESTOR SECTION
Date of request:

Requested by: Patty Golden

Formal Title: Discussion regarding process for Town Manager candidate interviews on 1/9/20.

Recommendations/Suggested Motion/Vote: Discussion regarding process for Town Manager candidate interviews on 1/9/20.

Background Information:
attached documents

Financial impact expected:n/a

Approximate agenda time requested:

Representative(s) expected to attend meeting:

Review:

Patty Golden	Pending	
Maryanne Bilodeau	Pending	
Jonathan Silverstein	Pending	
Daniel E Carty	Pending	
Board of Selectmen	Pending	01/07/2020 7:00 PM

SUDBURY BOARD OF SELECTMEN
Tuesday, January 7, 2020

MISCELLANEOUS (UNTIMED)

5: Town Counsel 3-year Evaluation

REQUESTOR SECTION
Date of request:

Requested by: Patty Golden

Formal Title: Discussion and possible vote on Town Counsel 3-year Evaluation

Recommendations/Suggested Motion/Vote: Discussion and possible vote on Town Counsel 3-year Evaluation

Background Information:
See attached Bylaw (Art VII) and summary evaluation.

Financial impact expected:

Approximate agenda time requested:

Representative(s) expected to attend meeting:

Review:

Patty Golden	Pending	
Maryanne Bilodeau	Pending	
Jonathan Silverstein	Pending	
Daniel E Carty	Pending	
Board of Selectmen	Pending	01/07/2020 7:00 PM

ARTICLE VII

LEGAL AFFAIRS

SECTION 1. The Selectmen shall appoint a member of the Bar in good standing to serve as Town Counsel from the date of his appointment and until his successor is appointed and enters upon the performance of his duties. The Selectmen may employ special counsel to assist the said Town Counsel.

SECTION 2. It shall be the duty of the Town Counsel to advise the Town in legal matters and to conduct all of the legal affairs of the Town.

SECTION 3. Except as otherwise specifically provided by the General Laws, the Selectmen shall be the agents of the Town to institute, prosecute and defend in the name of the Town, or otherwise, any and all claims, actions and proceedings to which the Town is a party or in which the interests of the Town are or may be involved.

SECTION 4. The Selectmen shall have the authority to settle at their discretion any action, suit or other proceeding to which the Town is a party or in which the interests of the Town are or may be involved provided funds are available therefor.

STM 10/16/2017

SECTION 5. SELECTION OF TOWN COUNSEL

(a) At least every 36 months, at the time of appointment, the Board of Selectmen shall discuss the performance of Town Counsel in regular session, and determine whether it would be in the best interest of the town to issue a request for proposals for Town Counsel candidates. If the Board of Selectmen votes to request proposals for the position of Town Counsel, the following competitive review procedure shall be utilized.

The competitive review procedure for selecting a qualified legal service provider shall be as follows, in the sequence listed, and the Selectmen shall allow at least four months to complete the listed steps:

i. Step 1. - The Selectmen shall request proposals from a minimum of three legal services providers. The request for proposals shall state the criteria by which candidates will be judged. Criteria shall include, but not limited to, qualifications, experience, and cost for providing services.

ii. Step 2. - The Selectmen shall review all proposals in sufficient detail to judge whether they are sufficiently responsive to the selection criteria to merit a subsequent interview.

iii. Step 3. - The Selectmen shall invite at least three responsive candidates to make oral presentations to the Selectmen in open session. Each candidate shall be allotted an equal length of time before the Selectmen.

Attachment5.a: Town Counsel Evaluation - Bylaw Art VII (3621 : Town Counsel 3-year Evaluation)

iv. Step 4. - After interviewing the responsive candidates and deliberating the merits of each responsive proposal, the Selectmen shall choose by majority vote the most responsive candidate for the succeeding term of Town Counsel and document the basis for the selection.

v. If the Selectmen do not approve of any of the candidates for Town Counsel among those interviewed, then the preceding four steps shall be repeated.

(b) If the Selectmen are unable to complete the selection process specified in Paragraph (a) to reappoint or replace Town Counsel by the end of the incumbent Town Counsel's term, the Selectmen may extend the term of the incumbent Town Counsel or appoint a qualified interim Town Counsel, in either case for a period not to exceed 120 calendar days, to allow the Selectmen to complete the selection process. Such an extension or interim appointment may only occur once after an unsuccessful selection process.

Attachment5.a: Town Counsel Evaluation - Bylaw Art VII (3621 : Town Counsel 3-year Evaluation)

SUDBURY BOARD OF SELECTMEN
Tuesday, January 7, 2020

MISCELLANEOUS (UNTIMED)

6: Fairbank update

REQUESTOR SECTION
Date of request:

Requested by: Patty Golden

Formal Title: Discussion on the Fairbank Community Center.

Recommendations/Suggested Motion/Vote: Discussion on the Fairbank Community Center.

Background Information:

Financial impact expected:

Approximate agenda time requested:

Representative(s) expected to attend meeting:

Review:

Patty Golden	Pending	
Maryanne Bilodeau	Pending	
Jonathan Silverstein	Pending	
Daniel E Carty	Pending	
Board of Selectmen	Pending	01/07/2020 7:00 PM

SUDBURY BOARD OF SELECTMEN
Tuesday, January 7, 2020

MISCELLANEOUS (UNTIMED)

7: Citizen's comments

REQUESTOR SECTION
Date of request:

Requested by: Patty Golden

Formal Title: Citizen's comments (cont.)

Recommendations/Suggested Motion/Vote:

Background Information:

Financial impact expected:

Approximate agenda time requested:

Representative(s) expected to attend meeting:

Review:

Patty Golden	Pending	
Maryanne Bilodeau	Pending	
Jonathan Silverstein	Pending	
Daniel E Carty	Pending	
Board of Selectmen	Pending	01/07/2020 7:00 PM

SUDBURY BOARD OF SELECTMEN
Tuesday, January 7, 2020

MISCELLANEOUS (UNTIMED)

8: Upcoming agenda items

REQUESTOR SECTION
Date of request:

Requested by: Patty Golden

Formal Title: Discuss upcoming agenda items

Recommendations/Suggested Motion/Vote:

Background Information:

Financial impact expected:

Approximate agenda time requested:

Representative(s) expected to attend meeting:

Review:

Patty Golden	Pending	
Maryanne Bilodeau	Pending	
Jonathan Silverstein	Pending	
Daniel E Carty	Pending	
Board of Selectmen	Pending	01/07/2020 7:00 PM

POTENTIAL UPCOMING AGENDA ITEMS/MEETINGS	
MEETING	**DESCRIPTION**
Thursday, Jan. 9, 2020 5:45 PM	Interview Town Manager candidates
Date to be determined	Discussion and possible vote on BOS financial policies
	Discussion on Historic Districts Commission appointment(s)
	CSX follow-up discussion
	Update from BOS Policy Subcommittee
	BOS social media policy
	Town meeting recap – year in review
	Route 20 empty corner lot – former gas station
	Update on traffic policy (Chief Nix)
	Update on crosswalks (Chief Nix/Dan Nason)
	Citizen Leadership Forum
	Town-wide traffic assessment and improve traffic flow
	Temporary Trailer permit - 150 Boston Post Road
	Wayside Inn Road Bridge
	Eversource double pole discussion
	Transportation Committee extension (January 2020)
	Future planning of Sewataro
	DLS discussion and possible presentation
STANDING ITEMS FOR ALL MEETINGS	BOS requests for future agenda items at end of meeting
	Citizens Comments, continued (if necessary)
	Fairbank Community Center update (ongoing)
	Bruce Freeman Rail Trail (BFRT) update (quarterly)

Attachment8.a: POTENTIAL UPCOMING AGENDA ITEMS_1_7_20 (3608 : Upcoming agenda items)

SUDBURY BOARD OF SELECTMEN
Tuesday, January 7, 2020

MISCELLANEOUS (UNTIMED)

9: Minutes approval

REQUESTOR SECTION
Date of request:

Requested by: Patty Golden

Formal Title: Approve regular session minutes of 10/11/19, 11/5/19, 11/19/19, and 11/21/19.

Recommendations/Suggested Motion/Vote: Approve regular session minutes of 10/11/19, 11/5/19, 11/19/19, and 11/21/19.

Background Information:

Financial impact expected:

Approximate agenda time requested:

Representative(s) expected to attend meeting:

Review:

Patty Golden	Pending	
Maryanne Bilodeau	Pending	
Jonathan Silverstein	Pending	
Daniel E Carty	Pending	
Board of Selectmen	Pending	01/07/2020 7:00 PM

SUDBURY BOARD OF SELECTMEN
Tuesday, January 7, 2020

CONSENT CALENDAR ITEM

10: Authorize TM to submit articles on BOS behalf

REQUESTOR SECTION
Date of request:

Requestor: Interim Town Manager Bilodeau

Formal Title: Vote to authorize the Interim Town Manager to submit 2020 Annual Town Meeting articles on behalf of the Board of Selectmen.

Recommendations/Suggested Motion/Vote: Vote to authorize the Interim Town Manager to submit 2020 Annual Town Meeting articles on behalf of the Board of Selectmen.

Background Information:

Financial impact expected:n/a

Approximate agenda time requested:

Representative(s) expected to attend meeting:

Review:

Patty Golden	Pending	
Maryanne Bilodeau	Pending	
Jonathan Silverstein	Pending	
Daniel E Carty	Pending	
Board of Selectmen	Pending	01/07/2020 7:00 PM

SUDBURY BOARD OF SELECTMEN
Tuesday, January 7, 2020

CONSENT CALENDAR ITEM

11: Accept $10K donation from LS

REQUESTOR SECTION
Date of request:

Requestor: Mara Huston, Park & Rec Commission

Formal Title: Vote to accept $10K donation from LSRHS to support the Featherland Multisport Court Project Phase 2 (Article #30 approved at ATM 2019).

Recommendations/Suggested Motion/Vote: Vote to accept $10K donation from LSRHS to support the Featherland Multisport Court Project Phase 2(Article #30 approved at ATM 2019).

Background Information:
Bella Wong, Superintendent of LSRHS, pledged $10K to support the reconstruction of the Featherland Multisport Court - phase 2. Attached is the letter from Bella Wong and a copy of the presentation from ATM May 2019 describing the donation to the hall. See slide 6 for reference to this donation.

Financial impact expected:$10K

Approximate agenda time requested:

Representative(s) expected to attend meeting:

Review:

Patty Golden	Pending	
Maryanne Bilodeau	Pending	
Jonathan Silverstein	Pending	
Daniel E Carty	Pending	
Board of Selectmen	Pending	01/07/2020 7:00 PM

Featherland Park Multisport Court Reconstruction (Phase 2)

Multiple Sports for Multiple Generations

Historical Perspective

- Initially built in 1961 and 1965
- Color coated in 1966
- Color coated in 1976
- Rebuilt in 1987
- Fencing damaged by snow plows and dismantled after winter 2014-2015
  - Courts had many large cracks through play surface
- Full project approved at ATM 2017
  - First two courts with Pickelball and tennis were completed Fall 2018
- Phase 2 is ready and will add four basketball half courts

Rehabilitate a town owned facility enjoyed for over 55 years.

Attachment11.a: ATM Article 30 Presentation May 2019 PRC (3618 : Accept $10K donation from LS)

Court Renovation History Since 2015

- PRC acted in response to the outcry from the community to replace the damaged courts
- LS tennis coach said the JV program depended on the use of the Featherland courts
- 2016 – Interim Park & Rec Director obtained a quote from Westboro Tennis Surfaces for $152K. PRC added 10% engineering fees for design. This passed Annual Town Meeting but failed at the Town Election. This was not CPC funds
- 2017 – new budgetary quote from Westboro Tennis Surface for $202K for four tennis courts, pickle ball and half-court basketball hoops and lines. CPC funds for $220K was approved at Annual Town meeting to cover design and construction costs.

Time line since ATM 2017

- September 2017 – DPW informed PRC that design was starting using part of original CPC allocation.
- Feb 2018 – DPW contracted a landscape architect for design and bid documents
- March 2018 – Dan Nason, DPW Director, informed PRC that original funds may not be sufficient. He suggested PRC consider a base bid with an alternative for the remaining two courts
- May 2018 – Bids share with PRC. PRC voted to move forward to prevent any further delay thus supporting DPW's recommendation and responding to community needs.
- July 2018 – Construction started
- October 2018 – Courts opened
- November 2018 – PRC submitted request to CPC to build remaining two courts
- January 2019 – CPC approved request to build remaining two courts

Attachment11.a: ATM Article 30 Presentation May 2019 PRC (3618 : Accept $10K donation from LS)

Financials of Phase 1

- $220,000 allocated in Spring ATM 2017
  - Survey, Bid and Design Costs - $13,769.88
  - Construction Costs - $170,000
  - Remaining funds available for phase 2 - $36,230.12
- Sunshine Paving was lowest bidder and built two courts with pickle ball

Phase 2 Details

- $220,000 being requested for reconstruction of remaining two courts
  - 2 Tennis courts
  - 4 half-court basketball courts
    - High School court dimensions,
    - Key and 3-point lines
  - LS has pledged $10,000 towards this project
  - $36,230.12 available from Phase 1 to apply to this project
  - Sunshine Paving is lowest bidder for $228,000
- Maintain current orientation
- Wheelchair accessible gates and ramps

Attachment11.a: ATM Article 30 Presentation May 2019 PRC (3618 : Accept $10K donation from LS)

Half Court Basketball on Each Tennis Court

DPW Process Going Forward
Design and build for longevity

- Original budgetary quotes in 2016 and 2017 were not based on design specifications
- Bids for both phase 1 and phase 2 are based on tight specifications developed by a landscape architect to ensure high quality results
- Going forward DPW will be using the following process to ensure we have sufficient funding:

Design

-> Bid

-> Request Funds

-> Build

Attachment11.a: ATM Article 30 Presentation May 2019 PRC (3618 : Accept $10K donation from LS)

Please Support Featherland Multisport Court Reconstruction

Multiple sports for Multiple Generations

Supporting Slides

May be needed to answer questions

10

Attachment11.a: ATM Article 30 Presentation May 2019 PRC (3618 : Accept $10K donation from LS)

Sudbury Research and Users

- Open Space Plan (2009)
  - Court sports were a high priority to survey respondents
- P&R Comm Public Hearing (Oct 2015).
  - Residents showed support for rebuilding the courts
- Town Vote for capital debt issues (May 2016)
  - Tennis only proposal.
  - Courts received 724 votes - did not pass
- CPC and Town Meeting approval for full project in ATM 2017
- Players of all ages and abilities can use these courts
- LS JV tennis team for girls and boys need these courts for practices and matches

11

Statement from Art Reilly, AD at LSRHS

Lincoln-Sudbury Athletics and the especially the LS tennis team would very much appreciate the addition of the two additional tennis courts at Featherland.

We appreciate the support from the community and these courts would allow us to not have our tennis players travel from LS across town to Feeley on an almost daily basis. On any given day the six courts are used by our girls tennis team, and the boys travel to Feeley to practice. Not having to be concerned with the students getting transportation across town each day would be a welcome relief for everyone. The Junior Varsity players would also be able to use the courts at Featherland for their matches. Our season lasts from mid-March to late May, from 3:00-5:00 each day.

LS is also bringing someone in to refurbish our tennis courts at this time.

LS appreciates the support of the Sudbury Park & Recreation Department and the Park & Rec Board. We all do our best to work together to support each other with fields, tennis courts and all athletic facilities. The support of this project would be very helpful for not only the town but also Lincoln-Sudbury Athletics.

Attachment11.a: ATM Article 30 Presentation May 2019 PRC (3618 : Accept $10K donation from LS)

LINCOLN SUDBURY REGIONAL SCHOOL DISTRICT
390 LINCOLN ROAD
SUDBURY, MASSACHUSETTS 01776-1409

BELLA T. WONG
SUPERINTENDENT/PRINCIPAL

CONTACT:
BELLA_WONG@LSRHS.NET
978-443-9961 - EXT 2373
FAX 978-443-8824

May 8, 2019

Robert Beagan, Chairperson
Sudbury Park and Recreation Commission
40 Fairbank Road
Sudbury, MA 01776

Dear Mr. Beagan:

I am writing to confirm that Lincoln-Sudbury Regional High School will transfer $10,000 from the Athletic Revolving Account to the Sudbury Park and Recreation Department to support its funding plan to restore the Featherland tennis courts. The revolving account is a modest account funded through the remainder of student athletic fees not used in a particular year for other expenses related to the athletic program. Funds from this account can only be used toward expenses related to LS Athletics. LS students who participate on the tennis team would benefit to have additional courts located closer to the main campus. Students can walk to the courts and it would also facilitate access to the LS Athletic Trainer when necessary. Therefore, the district deems the transfer of user fee funds appropriate toward this purpose.

Thank you for your service on behalf of youth well-being and fitness.

Sincerely,

Bella Wong

Cc: Lincoln-Sudbury School Committee
Sudbury Finance Committee
Sudbury Town Manager
Lincoln Finance Committee
Lincoln Town Manager

Attachment11.b: Letter from LS - Featherland Tennis Courts 2019 (3618 : Accept $10K donation from LS)

SUDBURY BOARD OF SELECTMEN
Tuesday, January 7, 2020

CONSENT CALENDAR ITEM

12: Vote to accept Baypath grants

REQUESTOR SECTION
Date of request:

Requestor: Debra Galloway, Senior Center Director

Formal Title: Vote to accept Baypath Elder Services grants for a total of $20,929, as requested by Debra Galloway, Senior Center Director.

Recommendations/Suggested Motion/Vote: Vote to accept Baypath Elder Services grants for a total of $20,929, as requested by Debra Galloway, Senior Center Director.

Background Information:
Attached documents

Financial impact expected:

Approximate agenda time requested:

Representative(s) expected to attend meeting:

Review:

Patty Golden	Pending	
Maryanne Bilodeau	Pending	
Jonathan Silverstein	Pending	
Daniel E Carty	Pending	
Board of Selectmen	Pending	01/07/2020 7:00 PM

Sudbury Senior Center
Sudbury Council on Aging
Town of Sudbury, Massachusetts

40 Fairbank Road • Sudbury, Massachusetts • 01776-1681 • www.sudburyseniorcenter.org
Phone: 978-443-3055 • Fax: 978-443-6009 • E-mail: senior@sudbury.ma.us

MEMORANDUM

TO: Town of Sudbury Selectboard

CC: Maryanne Bilodeau, Interim Town Manager

FROM: Sudbury Senior Center Director Debra Galloway

DATE: December 27, 2019

RE: BayPath Elder Services Grant Awards

This Sudbury Senior Center respectfully requests that the Sudbury Selectboard accept the following BayPath Elder Services grants to the Town of Sudbury – Sudbury Senior Center for a total of $20,929

Sudbury Shuttle Grant - $17,569
Outreach to Ethnic Minorities Grant - $3,360

Thank you!

Attachment12.a: memo to selectmen re baypath grants with Attmts (3622 : Vote to accept Baypath grants)

NOTIFICATION OF GRANT AWARD

AREA AGENCY ON AGING

BayPath Elder Services, Inc.
33 Boston Post Road West
Marlborough, MA 01752-1853

Project Identification Number		3B-20-05
CODE	CODE NO.	
1	1	Title III-B of theOlder Americans Act
	2	Title III-C of the Older Americans Act
	3	USDA Cash
	4	
CFDA	93.044	FEIN # 04-60013115

CODE	CODE NO.	TYPE OF GRANT OR ACTION
1	1	New or Continuation
	2	Title III-C of the Older Americans Act
	3	USDA Cash

2019-2020	Project Year of this Grant

APPROVED PROJECT PERIOD

BEGINNING	October 01, 2019	ENDING	September 30, 2020

PROJECT OR PROGRAM TITLE

Reaching Out to Older Adults of other Languages

NAME AND ADDRESS OF GRANTEE

NAME:	Sudbury Senior Center/Town of Sudbury				
ADDRESS:	40 Fairbank Road				
CITY:	Sudbury	ST:	MA	ZIP:	01776

APPROVED COST

ITEM	AMOUNT
PERSONNEL	$5,586.00
support costs	$25.00
OTHER:	
TOTAL COST	$5,611.00

ITEM	AMOUNT
A. Total Approved Budget	$5,611.00
B. Less: Project Income	
Less: Other Resources	
C. Net Cost	$5,611.00
D. Less: Match (cash)	($25.00)
Less: In-Kind	($2,226.00)
E. Federal Share of Cost	$3,360.00
F.	
G. Less: Prior Awards Total	
H. Amount of this Award *	$3,360.00
*subject to fund availability	

X LINE 'E' ABOVE CONSTITUTES A CEILING FOR FEDERAL PARTICIPATION IN THE APPROVED COST.

☐ THE FEDERAL SHARE IS EARNED ONLY WHEN THE COST IS ACCRUED AND THE NON-FEDERAL SHARE HAS BEEN CONTRIBUTED. RECEIPT OF FEDERAL FUNDS DOES NOT CONSTITUTE EARNINGS OF THESE FUNDS.

☐ SEE ATTACHED DETAILED BUDGET.

☐ OTHER:

NAME OF BAYPATH EXECUTIVE DIRECTOR	SIGNATURE	DATE
Christine Alessandro	Christine Alessandro	October 01, 2019
NAME OF AUTHORIZED GRANTEE OFFICIAL	SIGNATURE	DATE
Debra Galloway, Director	Debra Galloway	October 01, 2019

H:\JMG\GRANTNOTIF2.OFM | REV.:05-08-2002. JMG | White - Fiscal Yellow - DEA Pink - AAA Gold -Grantee

Attachment12.a: memo to selectmen re baypath grants with Attmts (3622 : Vote to accept Baypath grants)

NOTIFICATION OF GRANT AWARD

AREA AGENCY ON AGING

BayPath Elder Services, Inc.
33 Boston Post Road West
Marlborough, MA 01752-1853

Project Identification Number		3B-20-06
CODE	CODE NO.	
1	1	Title III-B of theOlder Americans Act
	2	Title III-C of the Older Americans Act
	3	USDA Cash
	4	
CFDA	93.044	FEIN # 04-6001315

CODE	CODE NO.	TYPE OF GRANT OR ACTION
1	1	New or Continuation
	2	Title III-C of the Older Americans Act
	3	USDA Cash

2019-2020	Project Year of this Grant
APPROVED PROJECT PERIOD	
BEGINNING: October 01, 2019	ENDING: September 30, 2020

PROJECT OR PROGRAM TITLE

Sudbury Shuttle Program

NAME AND ADDRESS OF GRANTEE

NAME:	Sudbury Senior Center/Town of Sudbury
ADDRESS:	40 Fairbank Road
CITY: Sudbury	ST: MA ZIP: 01776

APPROVED COST

ITEM	AMOUNT
PERSONNEL	$17,569.00
support costs	$4,006.00
OTHER:	
TOTAL COST	$21,575.00

ITEM	AMOUNT
A. Total Approved Budget	$21,575.00
B. Less: Project Income	
Less: Other Resources	
C. Net Cost	$21,575.00
D. Less: Match (cash)	($100.00)
Less: In-Kind	($3,906.00)
E. Federal Share of Cost	$17,569.00
F.	
G. Less: Prior Awards Total	
H. Amount of this Award *	$17,569.00
*subject to fund availability	

X LINE 'E' ABOVE CONSTITUTES A CEILING FOR FEDERAL PARTICIPATION IN THE APPROVED COST.

☐ THE FEDERAL SHARE IS EARNED ONLY WHEN THE COST IS ACCRUED AND THE NON-FEDERAL SHARE HAS BEEN CONTRIBUTED. RECEIPT OF FEDERAL FUNDS DOES NOT CONSTITUTE EARNINGS OF THESE FUNDS.

☐ SEE ATTACHED DETAILED BUDGET.

☐ OTHER:

NAME OF BAYPATH EXECUTIVE DIRECTOR	SIGNATURE	DATE
Christine Alessandro	Christine Alessandro	October 01, 2019
NAME OF AUTHORIZED GRANTEE OFFICIAL	SIGNATURE	DATE
Debra Galloway, Director	Debra Galloway	October 01, 2019

H:\JMG\GRANTNOTIF2.OFM REV.:05-08-2002. JMG White - Fiscal Yellow - DEA Pink - AAA Gold -Grantee

Attachment12.a: memo to selectmen re baypath grants with Attmts (3622 : Vote to accept Baypath grants)